WW-1 Detail

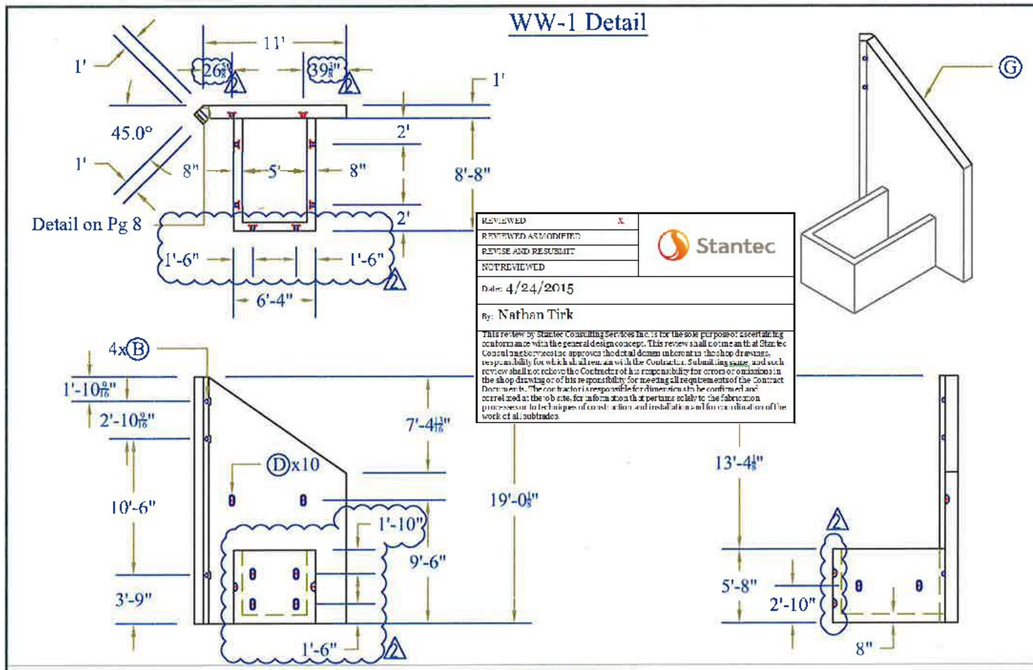

REVIEWED
REVIEWED AS MODIFIED
REVISE AND RESUBMIT
NOT REVIEWED
Date: 4/24/2015
By: Nathan Tirk

Stantec

This review by Stantec Consulting Services Inc. is for the sole purpose of ascertaining conformance with the general design concept. This review shall not constitute approval of detail dimensions or the shop drawings, responsibility for which shall remain with the Contractor. Submittals, and such review shall not relieve the Contractor of his responsibility for errors or omissions in the shop drawings or of his responsibility for meeting all requirements of the Contract Documents. The contractor is responsible for dimensions to be confirmed and correlated at the job site, for information that pertains solely to the fabrication processes or to techniques of construction and installation, and for coordination of the work of all subtrades.

WW-3A Detail

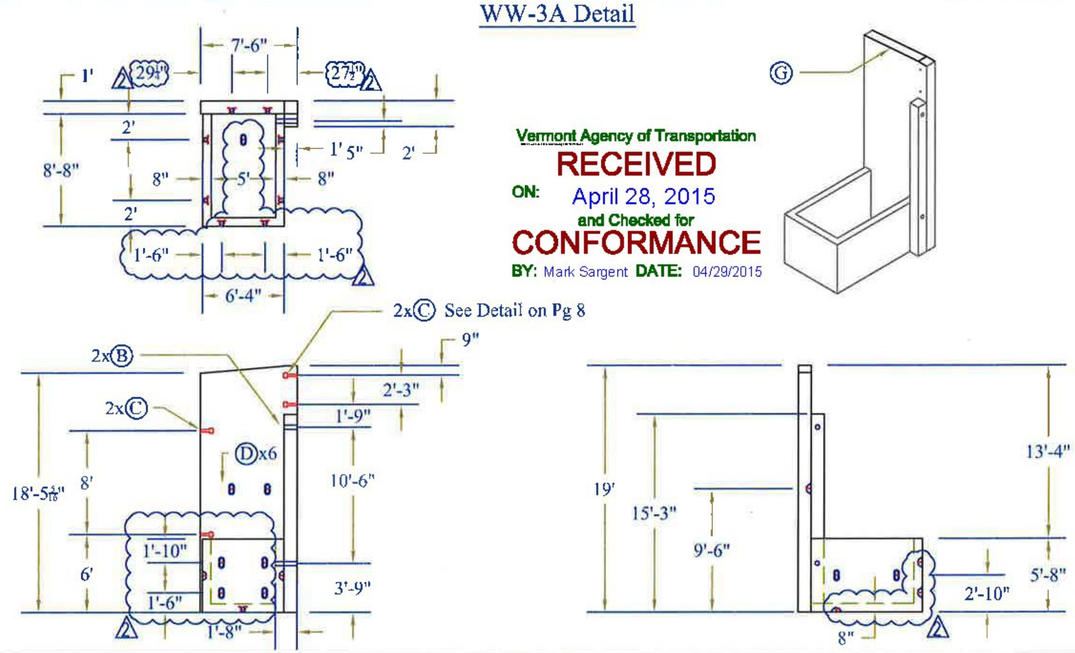

Vermont Agency of Transportation
RECEIVED
ON: April 28, 2015
and Checked for
CONFORMANCE
BY: Mark Sargent DATE: 04/29/2015

WW-2 Detail

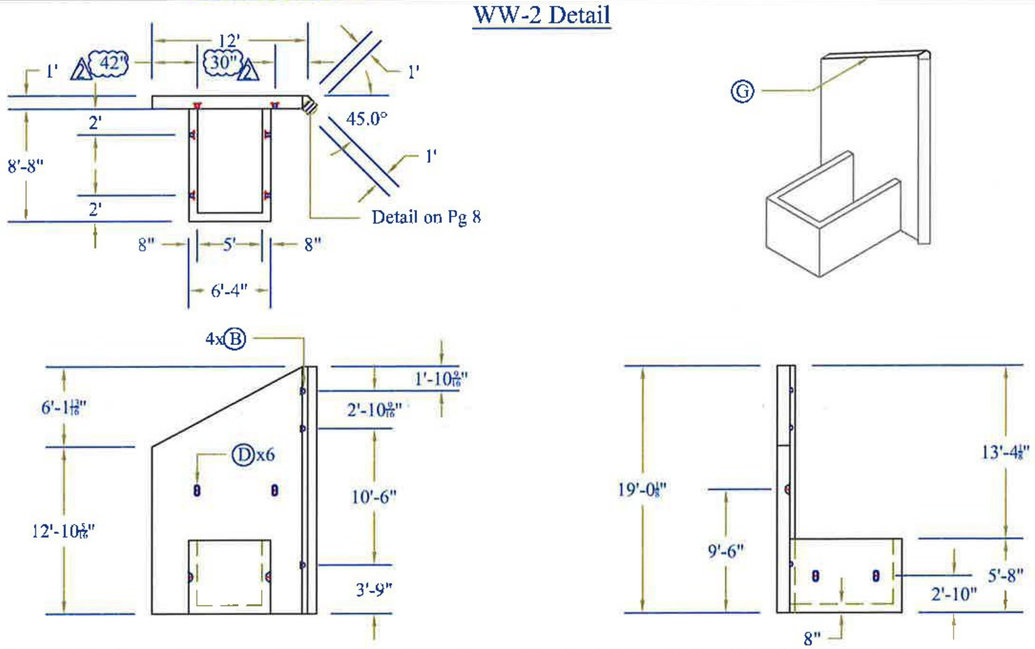

WW-3B Detail

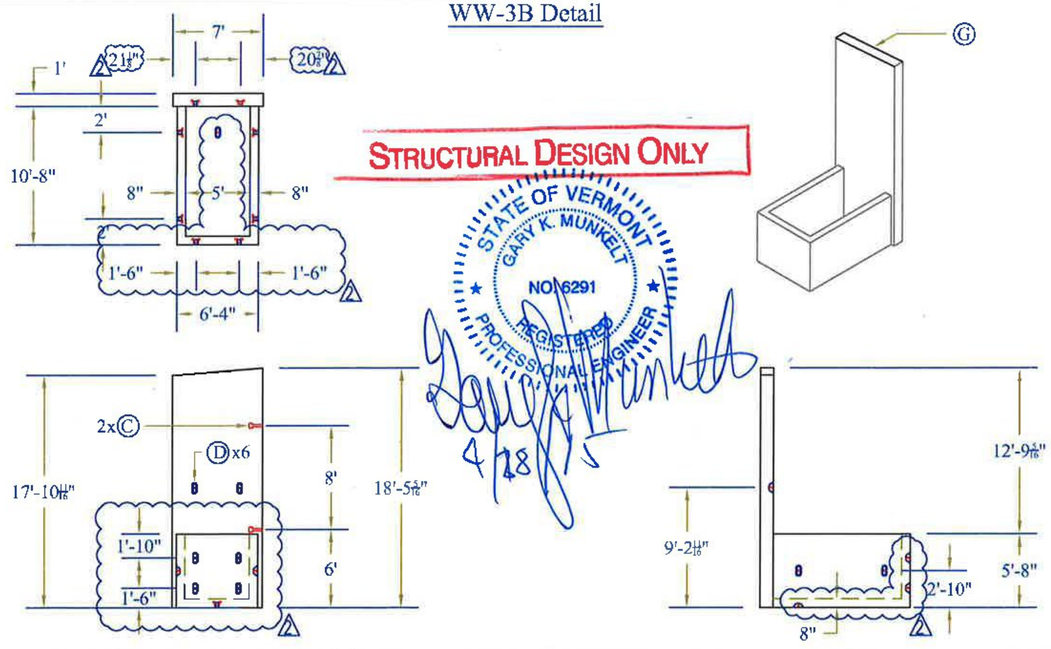

STRUCTURAL DESIGN ONLY

STATE OF VERMONT
GARY K. MUNKELT
NO. 6291
REGISTERED PROFESSIONAL ENGINEER

4/28

CONTRACTORS VISPE:

- (A) 3"Ø PVC Sleeve
- (B) 4"Ø PVC Sleeve
- (C) Mechanical Bolt Pocket (w/ 1"Ø Coil Rod)
- (D) Oxford A750-7 Lifting Device
- (E) 1"Øx5½" FS6 Coil Loop Insert
- (F) 1 1/2" x 3 1/2" Continuous Keyway
- (G) Solid Lines Indicate ¾" Chamfer
- (H) ⅝" F64 Ferrule Loop Insert

Rev.	Date	By	Description
1	03/25/15	IBA	Changes per Stantec & State Review
2	04/23/15	IBA	Changes for Production Purposes

PRECAST CONCRETE BOX CULVERT SHOP DRAWINGS (SDI JOB #15428)

SUPERVISOR: E. Barendse
DETAILER: I. ADAMS
CHECKER: E. Barendse
ENGINEER: G. K. Munkelt

PROJECT NAME: Bridport
PROJECT #: CULV(29) Br.#2
LOCATION: Bridport, VT

Peckham Road Corp.
1557 St. Rt. 9, #3
Lake George, NY 12845
Ph: (518) 747-3353

FABRICATOR:
193 INDUSTRIAL AVE.
WILLISTON, VT 05495
Ph: (802) 658-0201

SD Ireland PRECAST

02/12/15 | WING_WALLS_1 | 5_OF_8