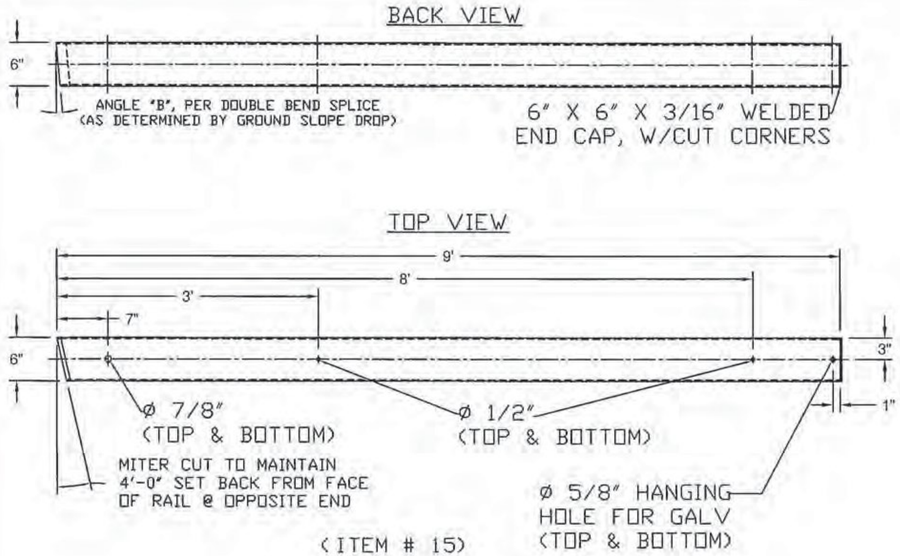

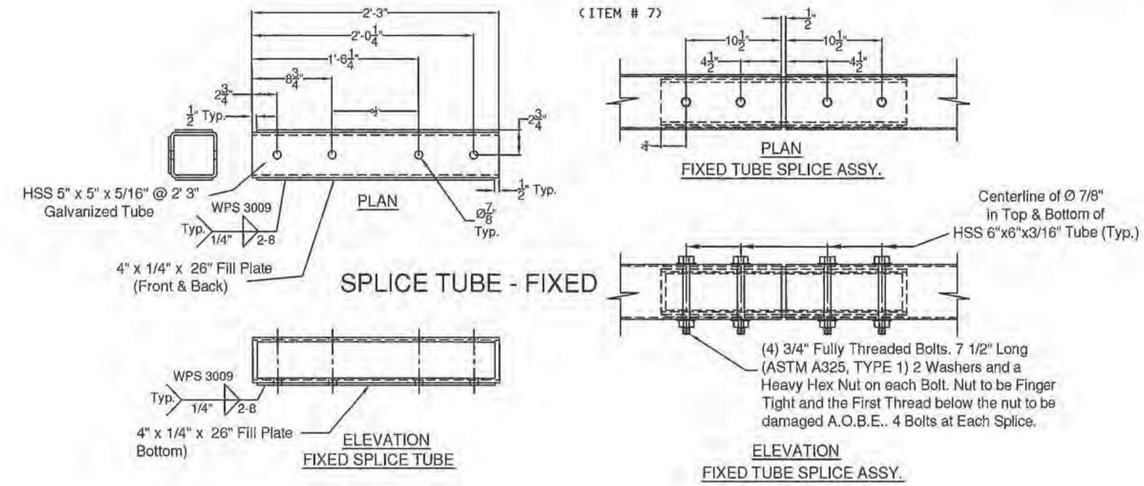

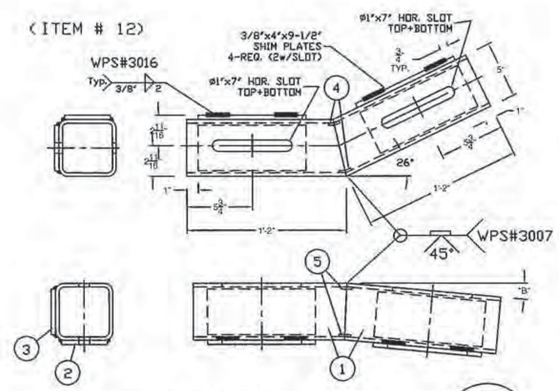

DOUBLE BEND TUBE SPLICE		
ITEM#	QTY.	DESCRIPTION
1	1	5" X 5" X 5/16" TUBE @ 26 3/4"
2	2	3/8" X 4" X 9 1/2" W/ SLOTS-ASTM A709 Gr36
3	2	3/8" X 4" X 9 1/2" W/O SLOTS-ASTM A709 Gr36
4	2	3/16" X 1" X 3 5/8" BACKER PLATE, FORMED
5	2	3/16" X 1" X 4" BACKER PLATE

"B" – TURN DOWN ANGLE SET BY THE 9" MEASURMENT AT THE END OF THE BOX BEAM.

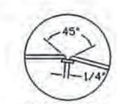

Welding Detail
WPS 3007

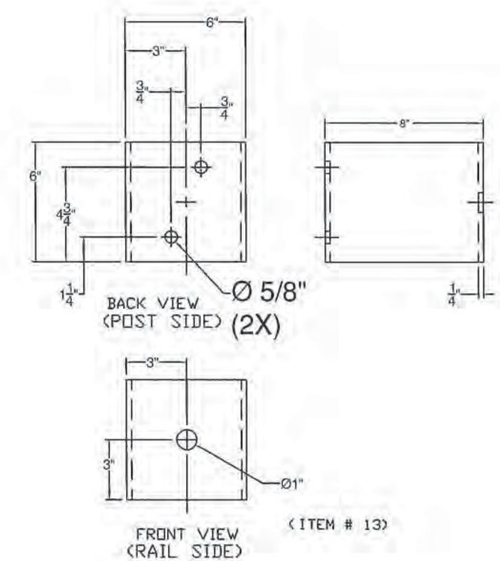

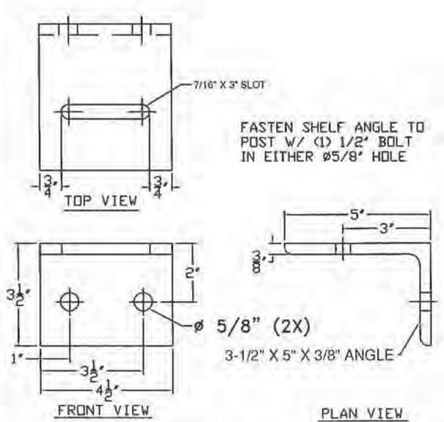

Vermont Agency of Transportation
RECEIVED
ON: December 29, 2014
and Checked for
CONFORMANCE
BY: TAS DATE: 01/20/2015

ITEM #: 621.72

SHEET 3 OF 5

STRUCTURAL STEEL TO COMPLY W/ ASTM A6

TOLERANCE UNLESS OTHERWISE NOTED:
FRACTIONS = ± 1/16"
ANGLES = ± 1/2°
DIAMETERS = ± 1/32"

GRAS, GLV 2 RAIL BOX BEAM

EM14-192, VT 121 (CL 2, TH 1) RURAL MAJOR COLLECTOR, BRIDGE NO : 11R
PROJECT: ROCKINGHAM BRF 0126(12), TOWN OF ROCKINGHAM, WINDHAM COUNTY, VT

REV	NO.	DATE	DESCRIPTION	BY	REV	NO.	DATE	DESCRIPTION	BY

ELDERLEE, INC.
OAKS CORNERS, NEW YORK 14518
E-Mail: dlong@elderlee.com / epeek@elderlee.com
Tel: 315-789-6670 Fax: 315-789-6615

CERTIFIED FABRICATOR

DRAWN	E.P.	12/24/14
CHECKED	D.L.	
APPROVED	M.V.	
SCALE	SCHEMATIC	
DRAWING NO.	FR L - ROCKINGHAM-T	