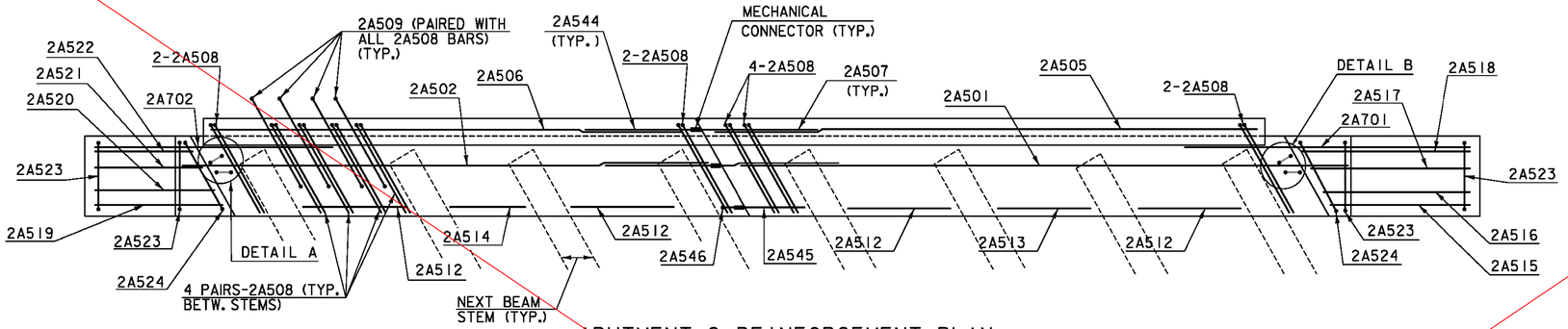

ABUTMENT 2 REINFORCEMENT PLAN

SCALE: N. T. S.

NOTE: PLAN VIEW IS FOR LAYOUT OF SPECIFIC BARS. NOT ALL ABUTMENT BARS ARE SHOWN IN PLAN VIEW.

PHASE I

PHASE II

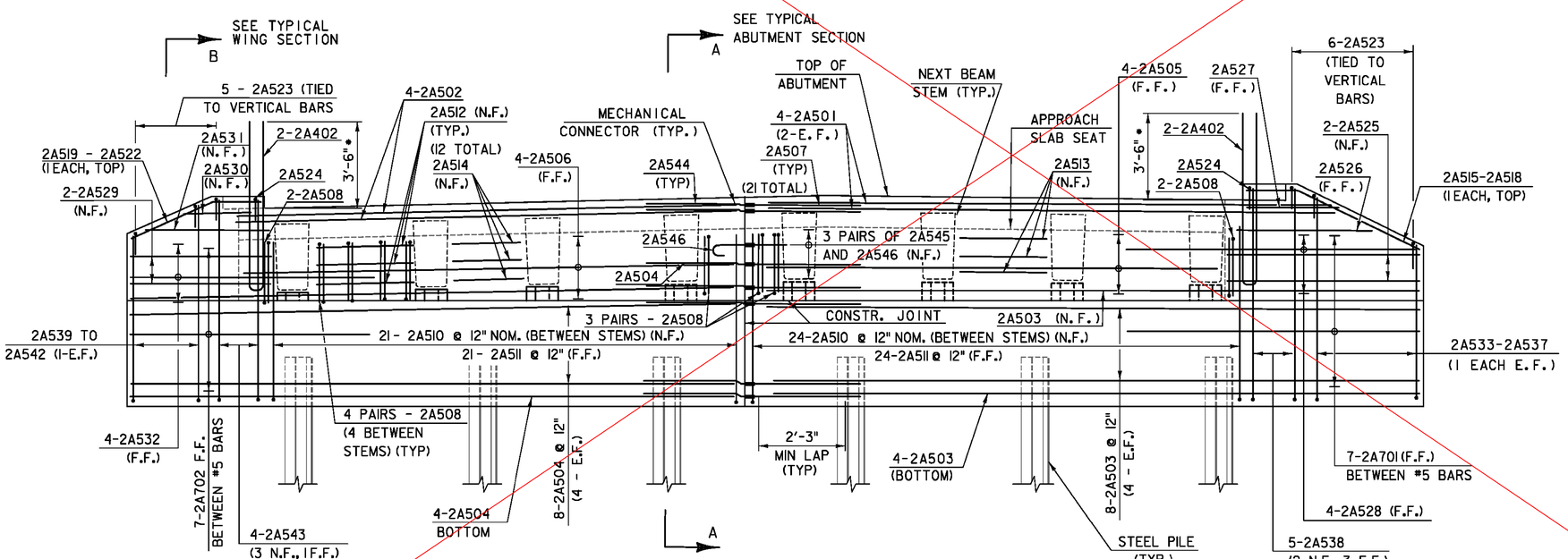

ABUTMENT 2 REINFORCMENT ELEVATION

SCALE: N. T. S.

NOTE: 2A509 BARS (APPROACH SLAB DOWELS) NOT SHOWN IN ELEVATION VIEW FOR CLARITY.

* TRIM 1A402 BARS IN FIELD AS NEEDED TO MAINTAIN COVER TO TOP OF CONCRETE BRIDGE RAILING END POST.

LEGEND

N.F. = NEAR FACE
F.F. = FAR FACE
E.F. = EACH FACE

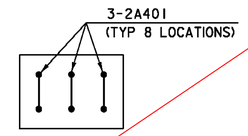

TYPICAL PEDESTAL REINFORCEMENT PLAN

SCALE: 1½" = 1'-0"

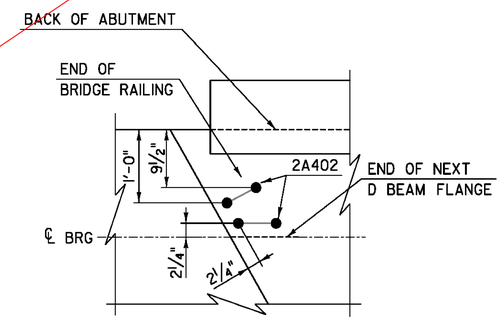

DETAIL A

SCALE: 1" = 1'-0"

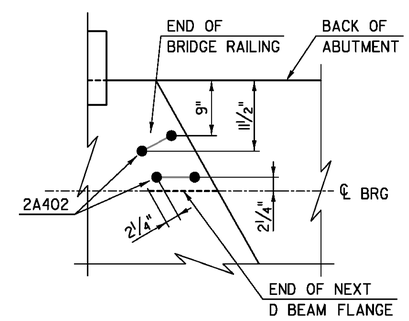

DETAIL B

SCALE: 1" = 1'-0"

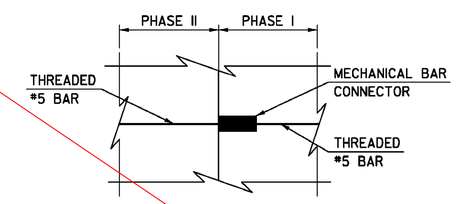

TYPICAL MECHANICAL CONNECTOR DETAIL

SCALE: 1½" = 1'-0"

PROJECT NAME:	ROCKINGHAM
PROJECT NUMBER:	BRF 0126(12)

TY·LIN INTERNATIONAL

FILE NAME: z10J072bdr_abut2R.dgn
PROJECT LEADER: R. HEBERT
DESIGNED BY: S. KELLER
ABUTMENT 2 REINFORCEMENT

PLOT DATE: 8/26/2014
DRAWN BY: B. CARTER
CHECKED BY: T. POULIN
SHEET 35 OF 69

SEE SHEET 35 VE