ABM INFO PAGE	LINE	SHIP MARK	QTY	MARK	MATERIAL	LENGTH FT	LENGTH INCHES	REMARKS	WT	PROCUREMENT NOTES
		9G9	1		GIRDER				23413	
1	G		1	wa	PL $\frac{1}{2}$x31$\frac{1}{2}$	70	0$\frac{5}{16}$	M270-50T2	3753	
1	J		1	wb	PL $\frac{1}{2}$x31$\frac{1}{2}$	36	11$\frac{15}{16}$	M270-50T2	1983	
1	L		1	ta	PL $\frac{7}{8}$x16	36	11$\frac{5}{8}$		1761	
1	E		1	tb	PL $\frac{7}{8}$x16	70	0	M270-50T2	3335	
1	C		1	ba	PL 2x16	36	10$\frac{3}{4}$	M270-50T2	4018	
1	A		1	bb	PL 2x16	69	11$\frac{7}{8}$	M270-50T2	7621	
2	B		4	x1a	PL $\frac{3}{4}$x6	2	7$\frac{1}{2}$	(MIE)	40	
2	C		5	x1c	PL $\frac{1}{2}$x5	2	7$\frac{1}{2}$		22	
2	C		11	x1f	PL $\frac{1}{2}$x5	2	7$\frac{1}{2}$		22	
3	B		321		STUD $\frac{7}{8}$ ϕ	0	7	A108	1	

BILL OF MATERIAL — JOB NO. 684 — DRAWING NO. 9 — REV. 1

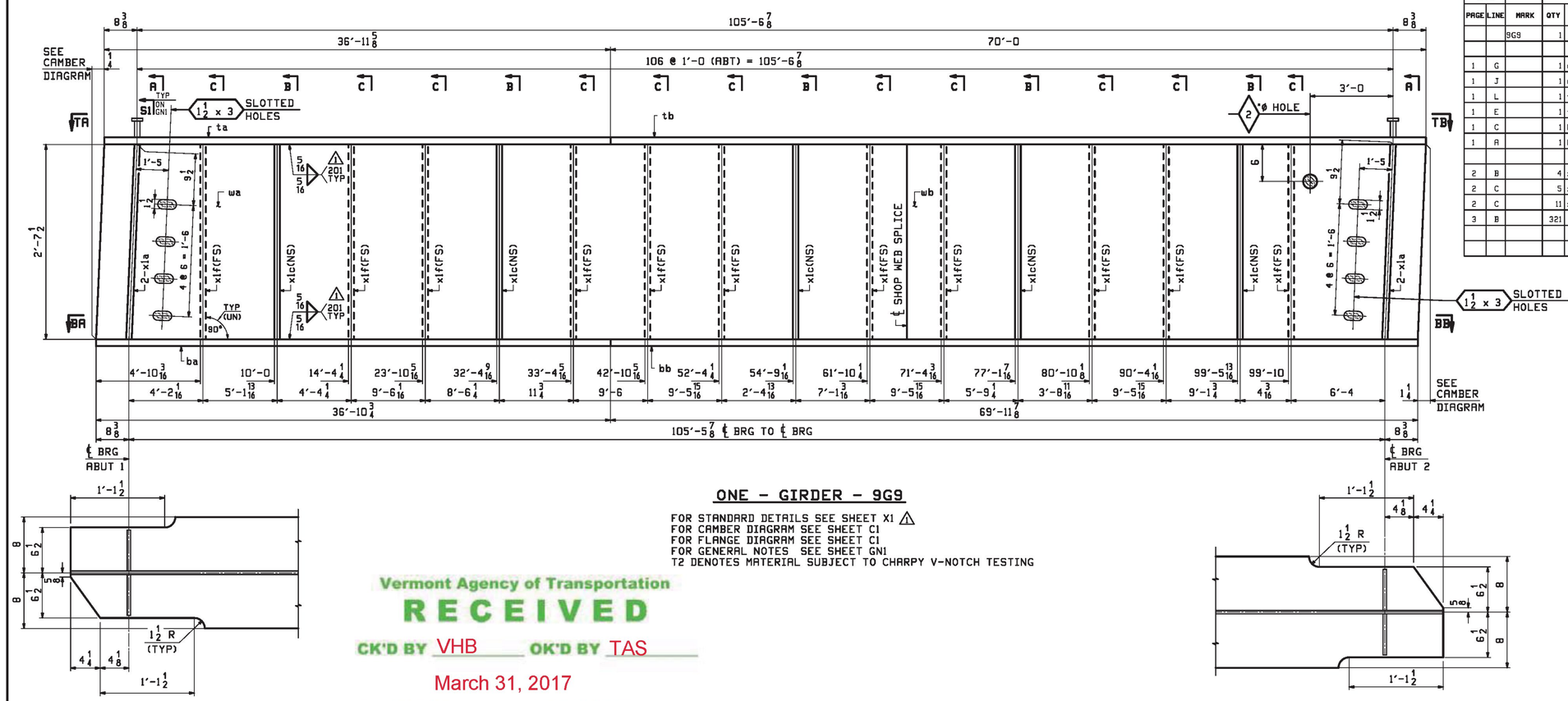

ONE - GIRDER - 9G9

FOR STANDARD DETAILS SEE SHEET X1 ⚠1
FOR CAMBER DIAGRAM SEE SHEET C1
FOR FLANGE DIAGRAM SEE SHEET C1
FOR GENERAL NOTES SEE SHEET GN1
T2 DENOTES MATERIAL SUBJECT TO CHARPY V-NOTCH TESTING

SECTION BA (AS SHOWN)
VIEW TA (SIMILAR)

SECTION BB (AS SHOWN)
VIEW TB (SIMILAR)

Vermont Agency of Transportation
RECEIVED
CK'D BY VHB OK'D BY TAS
March 31, 2017
RESUBMIT APPROVED YES
BY T Sumner DATE 4/11/17

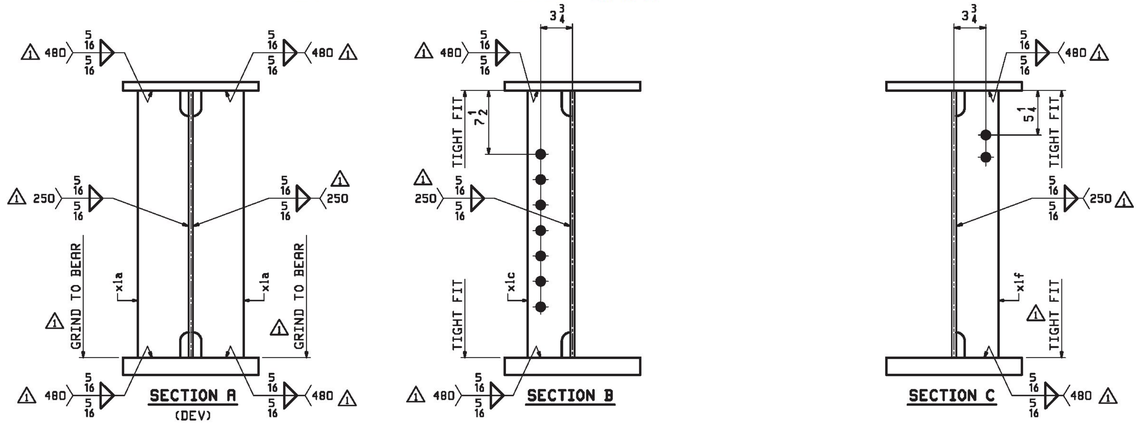

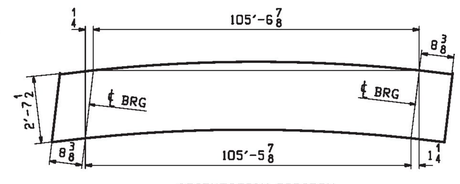

ORIENTATION DIAGRAM

SHOP DRAWING REVIEW

☒ REVIEWED AS REQUIRED BY THE CONSTRUCTION CONTRACT DOCUMENTS AND APPROVED, BUT ONLY FOR CONFORMANCE TO THE DESIGN CONCEPT OF THE WORK, AND SUBJECT TO FURTHER LIMITATIONS AND REQUIREMENTS CONTAINED IN THE CONSTRUCTION CONTRACT DOCUMENTS.
☐ REJECTED ☐ REVISE AND RESUBMIT ☐ FURNISH AS CORRECTED

CORRECTIONS OR COMMENTS MADE ON THE SHOP DRAWINGS DURING THIS REVIEW DO NOT RELIEVE CONTRACTOR FROM COMPLIANCE WITH REQUIREMENTS OF THE DRAWINGS AND SPECIFICATIONS. THIS CHECK IS ONLY FOR REVIEW OF GENERAL CONFORMANCE WITH THE DESIGN CONCEPT OF THE PROJECT AND GENERAL COMPLIANCE WITH THE INFORMATION GIVEN IN THE CONTRACT DOCUMENTS. THE CONTRACTOR IS RESPONSIBLE FOR: CONFIRMING AND CORRELATING ALL QUANTITIES AND DIMENSIONS; SELECTING FABRICATION PROCESSES AND TECHNIQUES OF CONSTRUCTION; COORDINATING HIS WORK WITH THAT OF ALL OTHER TRADES; AND PERFORMING HIS WORK IN A SAFE AND SATISFACTORY MANNER.

vhb
40 IDX Drive
Building 100, Suite 200
South Burlington, VT 05403
802.497.6100

Job Number: BRF 025-1(42)
Reviewed By: E.F. LAWES
Date: April 11, 2017

REV.	DATE	REMARKS	DWN	CHK	APVL	SHOP
1	03/09 2017	APPROVAL COMMENTS	ATD	PCP		
0						

MATERIAL: M270-50 (UN) | SURFACE PREP. & PAINT: SEE DWG GN1 | HOLES: 15/16"ϕ (UN) | SHOP BOLTS: NONE

DESCRIPTION: GIRDER - 9G9

CASCO BAY STEEL STRUCTURES, INC.
1 WALLACE AVE. SOUTH PORTLAND, ME 04106
PHONE (207) 780-6722 FAX. (207) 780-6726
TENSOR 3429

STRUCTURE:
VT RTE 103 (MAIN STREET) OVER BLACK RIVER
BRIDGE NO. 25
ROUTE T.H.1 (VT 103) CLASS 1 F.A.S. 025-1

DRAWN: ATD DATE: 12/07
CHKD: PCP DATE: 12/13

LOCATION: TOWN OF LUDLOW, WINDSOR COUNTY, VT
PROJ NO. BRF 025-1(42)
CUSTOMER: COLD RIVER BRIDGES, LLC.

JOB NO. 684 | DWG NO. 9 | REV. 1