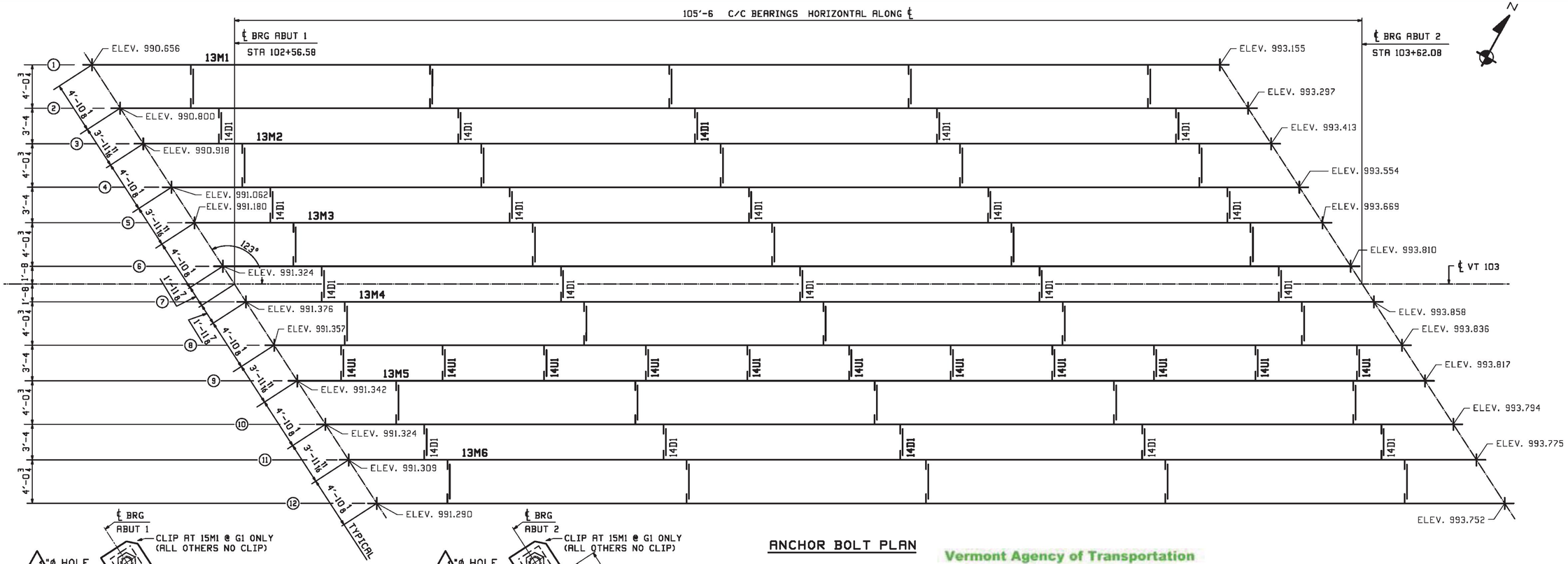

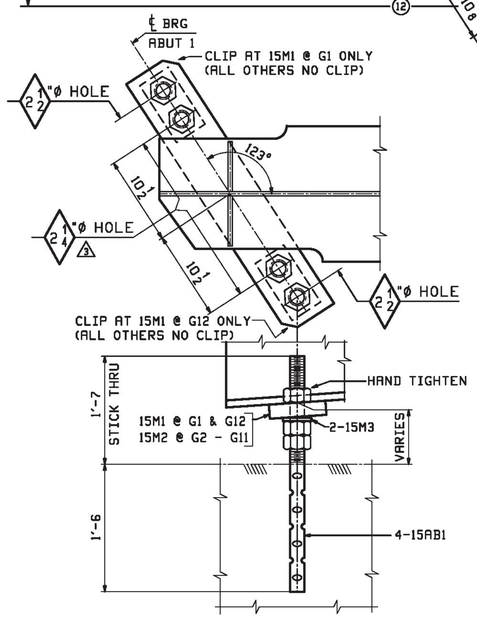

△2 ELEVATION VIEW - ABUT 1
TYP LINES 1 THRU 12

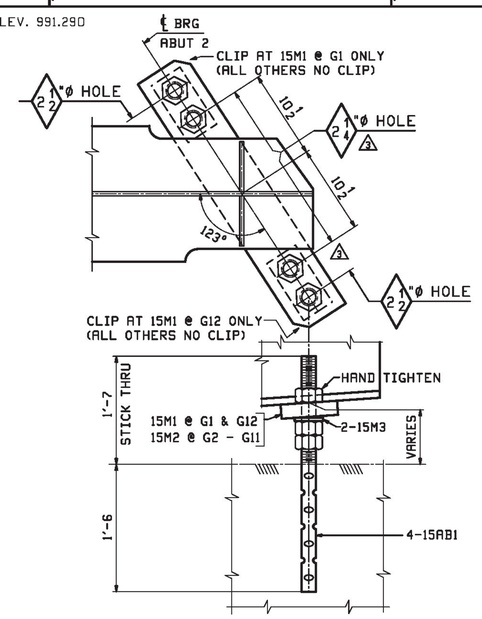

△2 ELEVATION VIEW - ABUT 2
TYP LINES 1 THRU 12

ANCHOR BOLT PLAN

Vermont Agency of Transportation
RECEIVED
CK'D BY VHB OK'D BY TAS
March 31, 2017
RESUBMIT _____ APPROVED YES
BY T Sumner DATE 4/11/17

NOTE:
ELEVATION TAKEN AT THE BOTTOM OF BTM FLANGE AT THE ℄ BRG & ℄ GIRDER

SHOP DRAWING REVIEW

☒ REVIEWED AS REQUIRED BY THE CONSTRUCTION CONTRACT DOCUMENTS AND APPROVED, BUT ONLY FOR CONFORMANCE TO THE DESIGN CONCEPT OF THE WORK, AND SUBJECT TO FURTHER LIMITATIONS AND REQUIREMENTS CONTAINED IN THE CONSTRUCTION CONTRACT DOCUMENTS.

☐ REJECTED ☐ REVISE AND RESUBMIT ☐ FURNISH AS CORRECTED

CORRECTIONS OR COMMENTS MADE ON THE SHOP DRAWINGS DURING THIS REVIEW DO NOT RELIEVE CONTRACTOR FROM COMPLIANCE WITH REQUIRMENTS OF THE DRAWINGS AND SPECIFICATIONS. THIS CHECK IS ONLY FOR REVIEW OF GENERAL CONFORMANCE WITH THE DESIGN CONCEPT OF THE PROJECT AND GENERAL COMPLIANCE WITH THE INFORMATION GIVEN IN THE CONTRACT DOCUMENTS. THE CONTRACTOR IS RESPONSIBLE FOR: CONFIRMING AND CORRELATING ALL QUANTITIES AND DIMENSIONS; SELECTING FABRICATION PROCESSES AND TECHNIQUES OF CONSTRUCTION; COORDINATING HIS WORK WITH THAT OF ALL OTHER TRADES; AND PERFORMING HIS WORK IN A SAFE AND SATISFACTORY MANNER.

vhb
40 IDX Drive
Building 100, Suite 200
South Burlington, VT 05403
802.497.6100

Job Number: BRF 025-1(42)
Reviewed By: E.F. LAWES
Date: April 11, 2017

REV.	DATE	REMARKS	DWN	CHK	APVL	SHOP
3	03/30 2017	APPROVAL COMMENTS	ATD	PCP		
2	03/09 2017	APPROVAL COMMENTS	ATD	PCP		
1	01/25 2017	ADD NEW DIAPH (EXTRA-TEC-3428-001) & REVISED ANCHOR MARK TO BE "15AB1" ONLY	ATD	PCP		
0						

MATERIAL: | SURFACE PREP. & PAINT: | HOLES: | SHOP BOLTS:

DESCRIPTION: ANCHOR BOLT PLAN

CASCO BAY STEEL STRUCTURES, INC.
1 WALLACE AVE. PHONE (207) 780-6722
SOUTH PORTLAND, ME 04106 FAX. (207) 780-6726
TENSOR 3428

STRUCTURE:
VT RTE 103 (MAIN STREET) OVER BLACK RIVER
BRIDGE NO. 25
ROUTE T.H.1 (VT 103) CLASS 1 F.A.S. 025-1

DRAWN: ATD	DATE: 12/19		
CHKD: PCP	DATE: 12/20		
LOCATION: TOWN OF LUDLOW, WINDSOR COUNTY, VT	JOB NO.	DWG NO.	
PROJ NO. BRF 025-1(42)	684	E2	
CUSTOMER: COLD RIVER BRIDGES, LLC.		REV. 3	