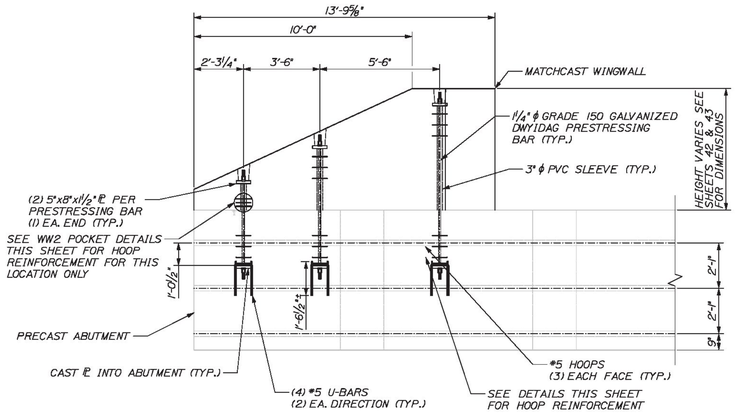

WINGWALL 2 POST-TENSIONING ELEVATION

NOTE: WINGWALL 3 SIMILAR
SCALE: 3/8" = 1'-0"

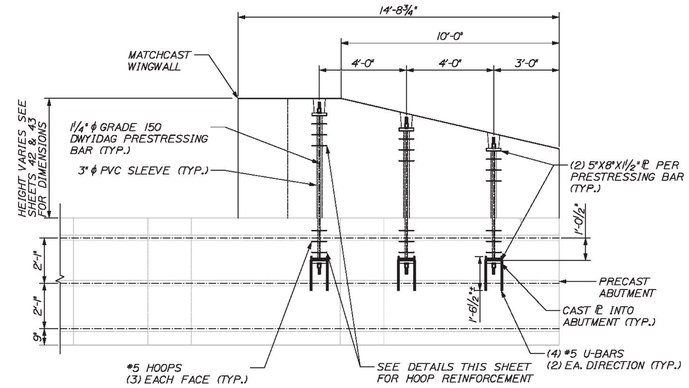

WINGWALL 1 POST-TENSIONING ELEVATION

NOTE: WINGWALL 4 SIMILAR
SCALE: 3/8" = 1'-0"

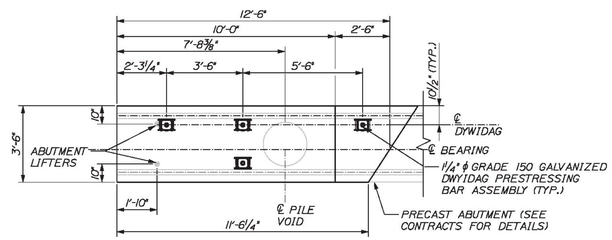

WINGWALL 2 POST-TENSIONING PLAN

NOTE: WINGWALL 3 SIMILAR
SCALE: 3/8" = 1'-0"

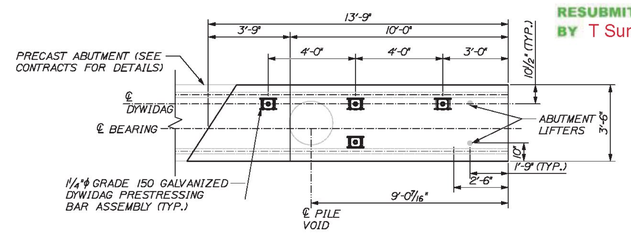

WINGWALL 1 POST-TENSIONING PLAN

NOTE: WINGWALL 4 SIMILAR
SCALE: 3/8" = 1'-0"

POST-TENSIONING NOTES

1. #5 HOOPS BY PRECASTER
2. REINFORCEMENT FOR ABUTMENT AND MATCH CAST WINGS NOT SHOWN, SEE SHEETS 44 AND 45
3. PLATE TO BE A36 GALVANIZED PER ASTM A 123
4. THREADBAR AND HARDWARE TO BE GALVANIZED PER ASTM A 153
5. FPU = 150KSI FOR THREADBAR PER DYWIDAG
6. THREADBARS SHALL BE PULLED TO A MAXIMUM OF 120 KSI AND LOCKED OFF AT A MINIMUM OF 105 KSI
7. INSTALL APPROVED NON-SHRINK GROUT TO FILL PT BAR POCKET
8. REQUIRED COMPRESSIVE STRENGTH OF CONCRETE TO BE 4 KSI
9. CONTRACTOR WILL USE SIKADUR 42 GROUT-PAK PT BETWEEN PRECAST ABUTMENT AND MATCHCAST WINGWALL
10. CONTRACTOR SHALL USE A CALIBRATED JACK TO POST-TENSION THREADBARS TO ENSURE THAT TENSION LIMITS ARE NOT EXCEEDED

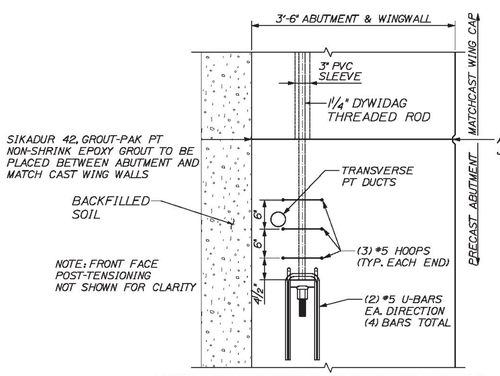

ABUTMENT/WINGWALL CONNECTION DETAIL

SCALE: 1" = 1'-0"

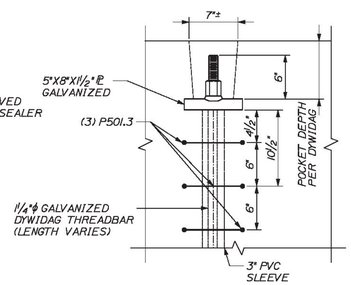

POST-TENSIONING BAR POCKET DETAIL (TYP)

SCALE: 1 1/2" = 1'-0"

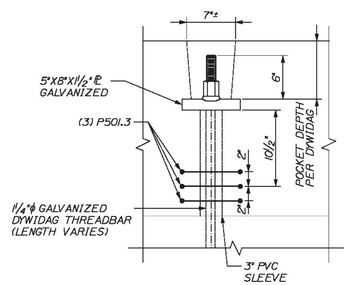

WW2 POST-TENSIONING POCKET DETAIL

SCALE: 1 1/2" = 1'-0"

Vermont Agency of Transportation
RECEIVED
CK'D BY VHB OK'D BY TAS
March 7, 2017
RESUBMIT NO APPROVED AS NOTED
BY T Sumner DATE 3/9/17

SHOP DRAWING REVIEW

☐ REVIEWED AS REQUIRED BY THE CONSTRUCTION CONTRACT DOCUMENTS AND APPROVED, BUT ONLY FOR CONFORMANCE TO THE DESIGN CONCEPT OF THE WORK, AND SUBJECT TO FURTHER LIMITATIONS AND REQUIREMENTS CONTAINED IN THE CONSTRUCTION CONTRACT DOCUMENTS.

☐ REJECTED ☐ REVISE AND RESUBMIT ☒ FURNISH AS CORRECTED

CORRECTIONS OR COMMENTS MADE ON THE SHOP DRAWINGS DURING THIS REVIEW DO NOT RELIEVE CONTRACTOR FROM COMPLIANCE WITH REQUIRMENTS OF THE DRAWINGS AND SPECIFICATIONS. THIS CHECK IS ONLY FOR REVIEW OF GENERAL CONFORMANCE WITH THE DESIGN CONCEPT OF THE PROJECT AND GENERAL COMPLIANCE WITH THE INFORMATION GIVEN IN THE CONTRACT DOCUMENTS. THE CONTRACTOR IS RESPONSIBLE FOR: CONFIRMING AND CORRELATING ALL QUANTITIES AND DIMENSIONS; SELECTING FABRICATION PROCESSES AND TECHNIQUES OF CONSTRUCTION; COORDINATING HIS WORK WITH THAT OF ALL OTHER TRADES; AND PERFORMING HIS WORK IN A SAFE AND SATISFACTORY MANNER.

vhb
40 IDX Drive
Building 100, Suite 200
South Burlington, VT 05403
802.497.6100

Job Number: BRF 025-1(42)
Reviewed By: E.F. LAWES
Date: MARCH 9, 2017

CALDERWOOD ENGINEERING, ETC.
STRUCTURAL ENGINEERING • DETAILING SERVICES
122 RIVER RD. RICHMOND, ME 04357 PH/FX (207)737-2007/(207) 737-2008
PREPARED FOR:
COLD RIVER BRIDGES, LLC

CEE 16-16-COLDRIVERBRIDGES
01-CS-LUDLOW

STATE OF MAINE
ERIC F. CALDERWOOD
No. 9099
LICENSED PROFESSIONAL ENGINEER

9099	P.E. NUMBER	
	DATE	

	BY	DATE
DESIGN-DETAILED	CM	FEB 2017
CHECKED-REVIEWED	TDC	
REVISIONS 1		
REVISIONS 2		
REVISIONS 3		
REVISIONS 4		
FIELD CHANGES		

VE SUPER DESIGN
LUDLOW VT. BRF 025-1(42)

WINGWALL POST-TENSIONING DIMENSIONS