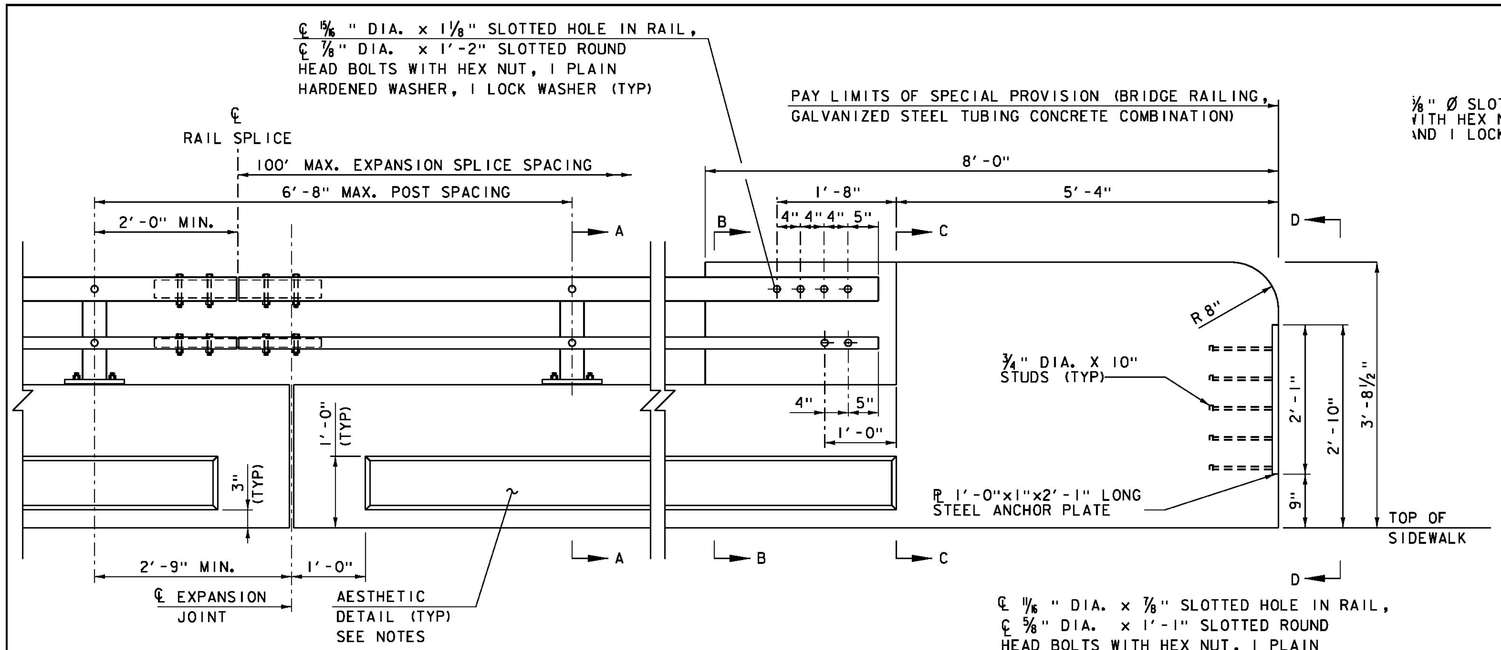

RAILING & END WALL APPROACH
SCALE 1" = 1'-0"

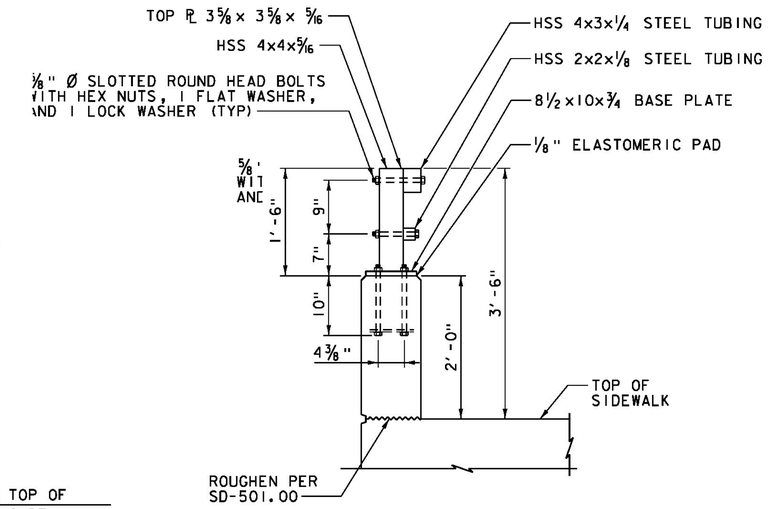

RAIL TYPICAL SECTION
SCALE 1" = 1'-0"

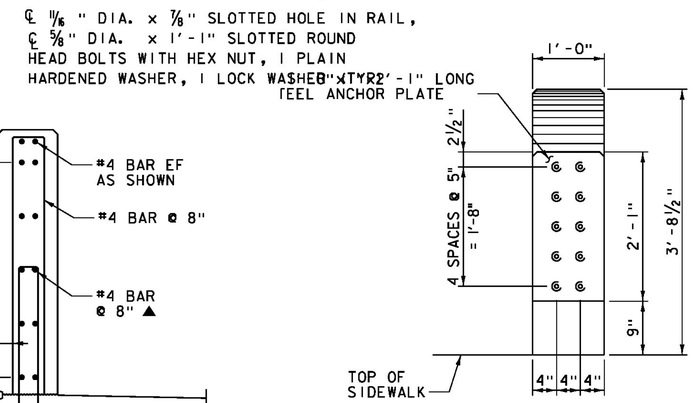

SHOWING EMBEDDED STUDS

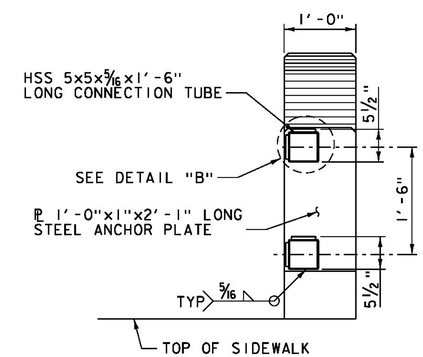

WITH HSS CONNECTOR TUBE

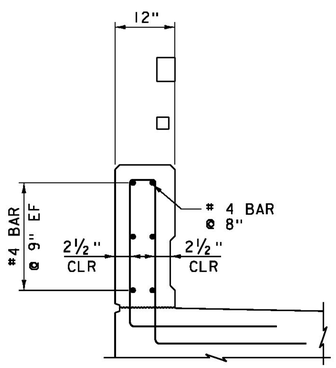

SECTION A-A
NOT TO SCALE

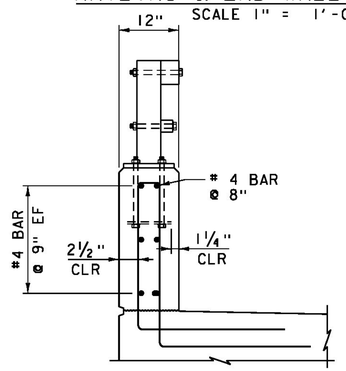

SECTION B-B
NOT TO SCALE

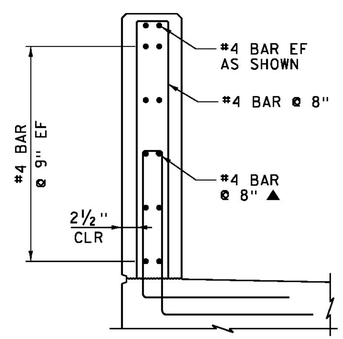

SECTION C-C
NOT TO SCALE

VIEW D-D

NOTE:

NF = NEAR FACE
FF = FAR FACE
EF = EACH FACE
▲ = CUT TO FIT IN FIELD
3" CLEAR, UNLESS OTHERWISE SPECIFIED ON THE PLANS.
2'-2" BAR LAP UNLESS OTHERWISE SPECIFIED ON THE PLANS.

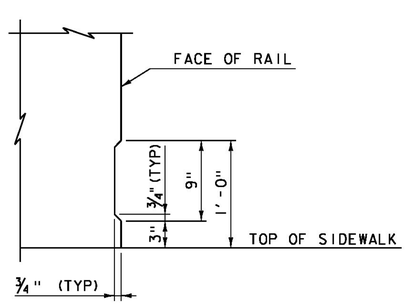

AESTHETIC TREATMENT DETAIL
SCALE 1 1/2" = 1'-0"

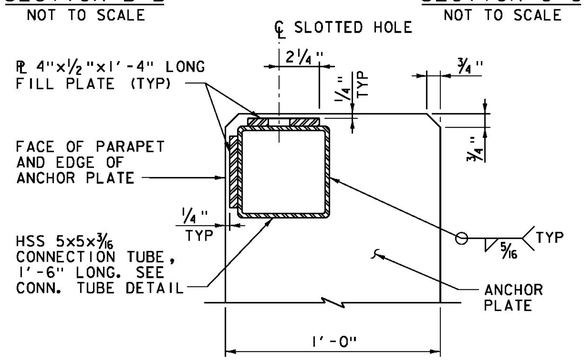

DETAIL B
SCALE 3" = 1'-0"

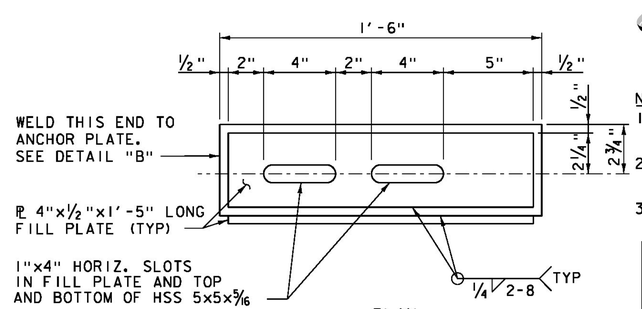

PLAN

CONNECTION TUBE DETAIL
SCALE 3" = 1'-0"

NOTES:

1. SEE STANDARDS S-352B AND S-352C FOR STEEL TUBING SPLICE DETAILS AND RAIL POST BASE PLATE DETAILS.
2. THIS RAILING MEETS THE REQUIREMENTS FOR NCHRP REPORT 350 TL-4 SERVICE LEVEL.
3. ALL EXPOSED STEEL COMPONENTS TO BE PAINTED BLACK.

PROJECT NAME: LUDLOW	
PROJECT NUMBER: BRF 025-1(42)	
FILE NAME: z10J068brail_dt.dgn	PLOT DATE: 8/23/2016
PROJECT LEADER: A.P. GUYETTE	DRAWN BY: J.L. LEMIEUX
DESIGNED BY: S.E. BURBANK	CHECKED BY: A.P. GUYETTE
BRIDGE RAIL DETAILS (1 OF 4)	SHEET 50 OF 73

VHB 57435