NOTES:
1. ALL REINFORCING TO BE LEVEL I, BLACK (UNCOATED).
2. COVER TO REINFORCING: SEE DETAILS

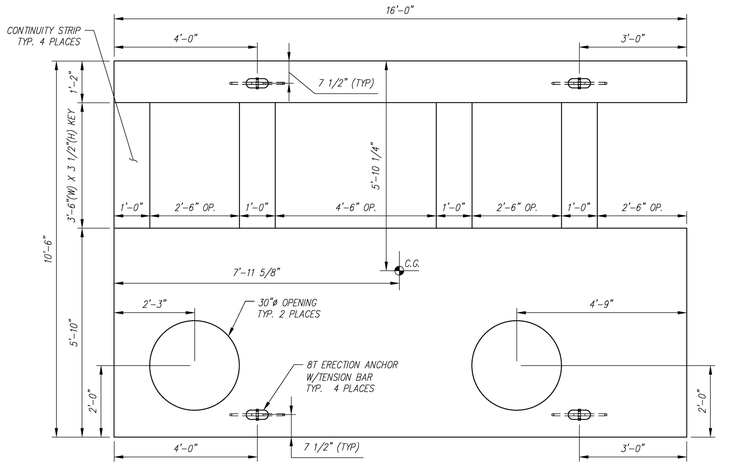

NOTE: EXPOSED BARS NOT SHOWN FOR CLARITY

PLAN VIEW
SCALE: 1/2" = 1'-0"

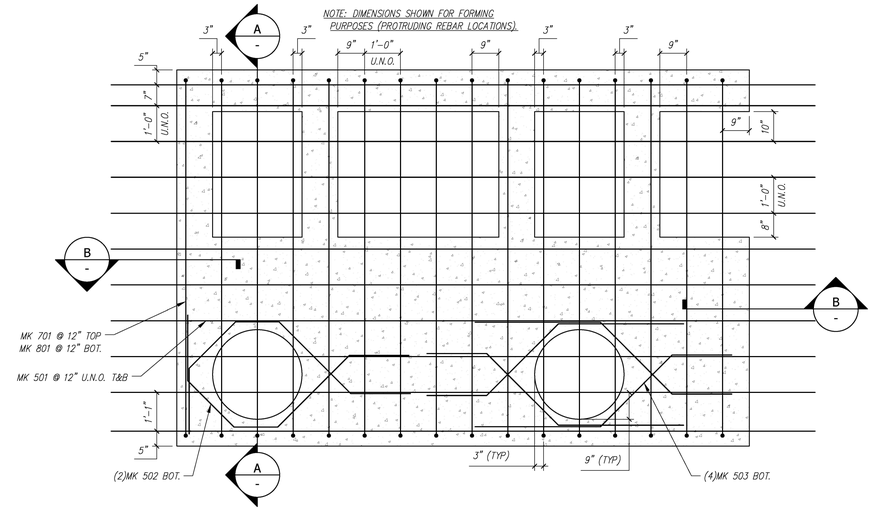

REINFORCING PLAN
SCALE: 1/2" = 1'-0"

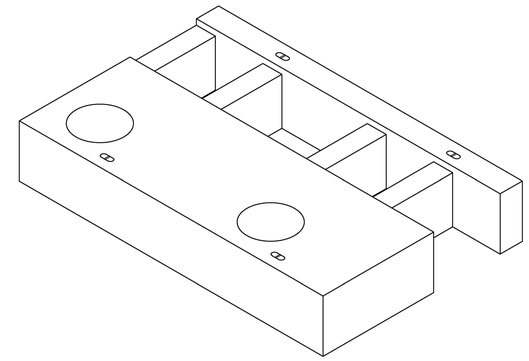

NOTE: EXPOSED BARS NOT SHOWN FOR CLARITY

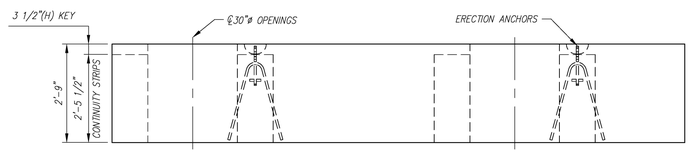

NOTE: EXPOSED BARS NOT SHOWN FOR CLARITY

FRONT ELEVATION
SCALE: 1/2" = 1'-0"

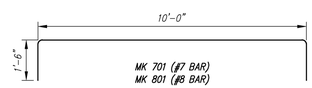

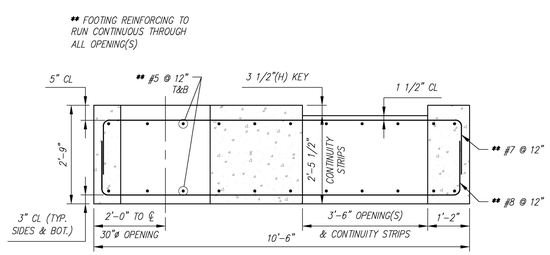

TYP. REINFORCING SECTION
SCALE: 1/2" = 1'-0"

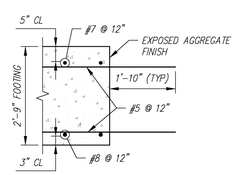

TYP. REINFORCING SECTION
SCALE: 1/2" = 1'-0"

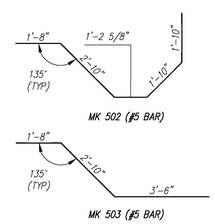

BENDING SCHEDULE
SCALE: 3/8" = 1'-0"

Vermont Agency of Transportation
RECEIVED
ON: April 27, 2016
and Checked for
CONFORMANCE
BY: Rob Young DATE: 04/28/2016

REVIEWED:	X
REVIEWED, REVISIONS NOTED:	
REVISE AND RESUBMIT	
NOT REVIEWED	

Stantec

Date: 4/27/16

Signature:

This review by Stantec Consulting Services Inc. is for the sole purpose of ascertaining conformance with the general design concept. This review shall not mean that Stantec Consulting Services Inc approves the detail design inherent in the shop drawings, responsibility for which shall remain with the Contractor. Submitting same, and such review shall not relieve the Contractor of his responsibility for errors or omissions in the shop drawing or of his responsibility for meeting all requirements of the Contract Documents. The contractor is responsible for dimensions to be confirmed and correlated at the job site, for information that pertains solely to the fabrication processes or to techniques of construction and installation and for coordination of the work of all subtrades.

F6 - BILL OF MATERIALS / EMBEDS

CSI ID#	DESCRIPTION	QTY	UM	COMMENTS
EM-00122	8TON ERECTION ANCHOR GALV QL049G	4	EA	W/TENSION BAR
RM-00015	REBAR #5 BLACK-GR 60 40'	504	LB	
RM-00009	REBAR #7 BLACK-GR 60	425	LB	
RM-00104	REBAR #8 BLACK GR 60	555	LB	
MX-FA5000SC30	MIX DESIGN - FLY ASH 5000 SELF COMPACTIN	11.68	CY	

F6 Rebar Schedule

MK		QTY	LENGTH
501	#5	22	19 '- 8 "
502	#5	2	9 '- 4.5 "
503	#5	4	8 '- 0 "
701	#7	16	13 '- 0 "
801	#8	16	13 '- 0 "

PIECE QUANTITY: 1 EACH
WEIGHT: 23.66 TONS

Contractor is to verify that all information shown on drawings has been thoroughly checked, complies with the contract documents and is adequate to meet the field conditions. Some dimensions and details may differ slightly from contract drawings to accommodate the manufacturing or design process. Approval of this drawing indicates that any deviation from the contract documents has been reviewed and found to be acceptable. Production will not commence until receipt of signed, approved shop drawings.

This drawing contains information proprietary to CONCRETE SYSTEMS, INC. This drawing is disclosed with the understanding that it will be retained in confidence and its use limited solely to the purpose for which it is disclosed. It is understood that no reproduction of this drawing is authorized without permission from CONCRETE SYSTEMS, INC. and that it will be returned to CONCRETE SYSTEMS, INC. upon request.

Rev.	Date	DESCRIPTION	By
10			
9			
8			
7			
6			
5			
4			
3			
2			
1	04/15/2016	ADDED NOTES/DIMENSIONS TO "REINFORCING PLAN"	AK

REVISIONS

This drawing is based upon information provided from the following documents and/or sources:
Engineer: STANTEC CONSULTING SERVICES, INC.
Project No:
Drawings: PROJECT PLANS
Specifications:
Other Sources:

Concrete Systems Inc.
9 Commercial St., Hudson, NH,03051
Phone 603-889-4163
Fax 603-889-2417

STATE AGENCY
VTrans Working to Get You There

Drawn By A KOSTENKO	Date 04/04/2016
Reviewed By	Date
Approved By	Date

VTAOT PROJ. NO.: BRF 0151(21)

MILLER CONSTRUCTION, INC.
ROUTE 106 BRIDGE REPLACEMENT T.H. 61 (KENDALL ROAD)
WOODSTOCK, VT

D | Drawing No. SHOP DRAWING – F6 R-S22624-F6 | REV 1

Quantity: 1 | Project No: | SHEET F6 OF