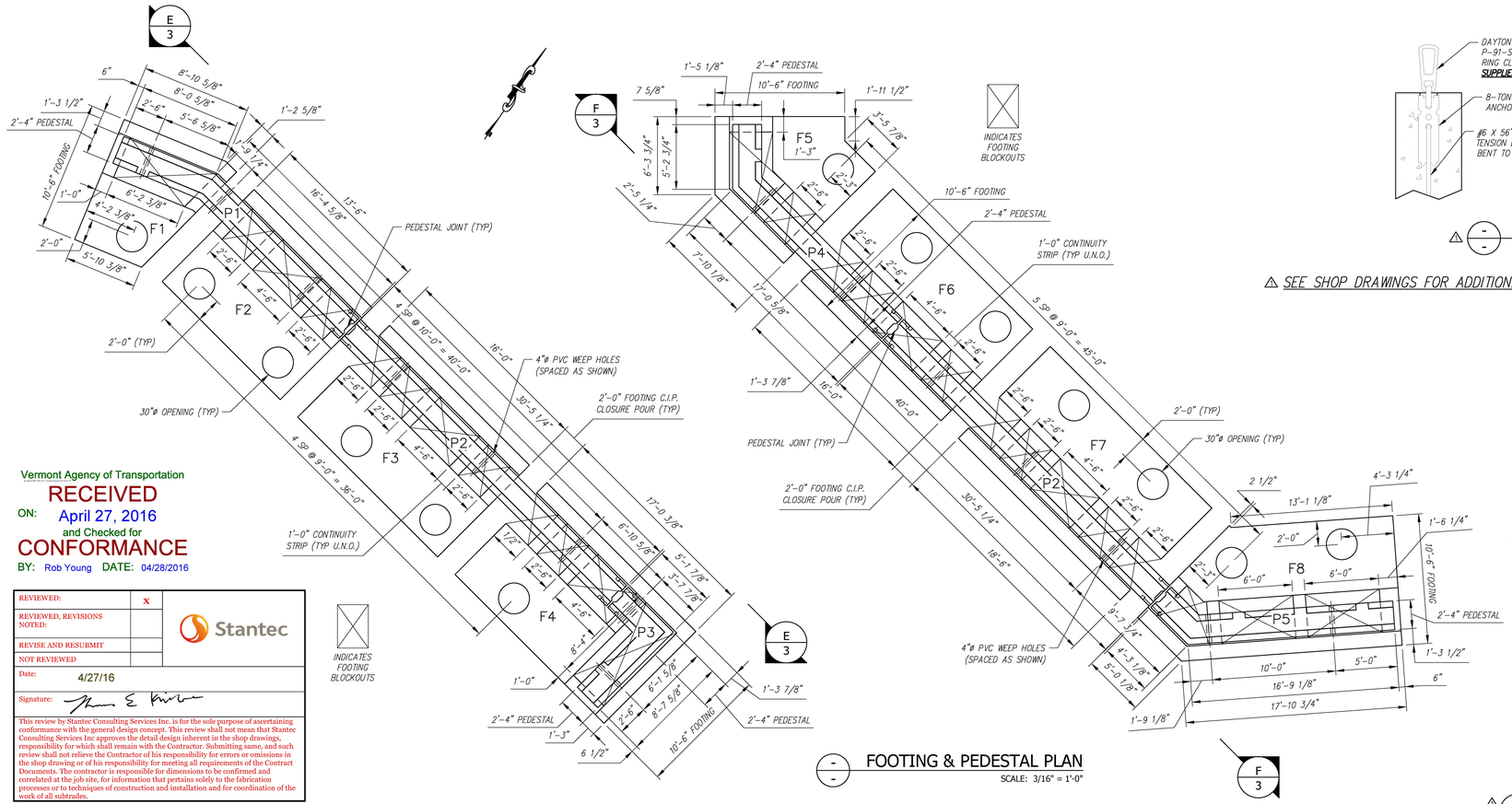


FOOTING & PEDESTAL PLAN
SCALE: 3/16" = 1'-0"

| FOOTING AND PEDESTAL PIECE SCHEDULE (MX-FA5000SC30) | | | | | |
|---|---|---|---|---|---|
| MARK | QTY | LENGTH | YDS | WEIGHT | |
| F1 | 1 | 7.99 ' | 5.52 | 11.18 | TONS |
| F2 | 1 | 13.50 ' | 9.90 | 20.05 | TONS |
| F3 | 1 | 16.00 ' | 11.68 | 23.66 | TONS |
| F4 | 1 | 17.03 ' | 11.20 | 22.69 | TONS |
| F5 | 1 | 9.81 ' | 6.84 | 13.84 | TONS |
| F6 | 1 | 16.00 ' | 11.68 | 23.66 | TONS |
| F7 | 1 | 18.50 ' | 13.46 | 27.27 | TONS |
| F8 | 1 | 18.11 ' | 12.59 | 25.49 | TONS |
| P1 | 1 | 23.98 ' | 10.53 | 21.31 | TONS |
| P2 | 2 | 30.44 ' | 13.35 | 27.04 | TONS |
| P3 | 1 | 11.46 ' | 5.01 | 10.15 | TONS |
| P4 | 1 | 21.32 ' | 9.36 | 18.95 | TONS |
| P5 | 1 | 19.96 ' | 8.75 | 17.72 | TONS |

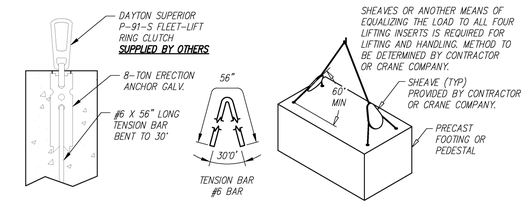


TYPICAL LIFTING DETAILS
SCALE: N.T.S.

SEE SHOP DRAWINGS FOR ADDITIONAL DETAILS.

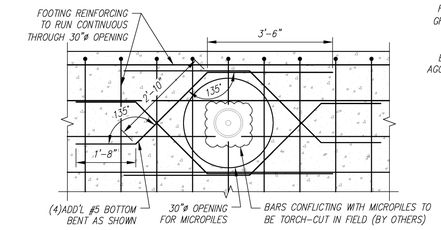


ADDITIONAL REINFORCING AT 30" OPENINGS
SCALE: 1/2" = 1'-0"

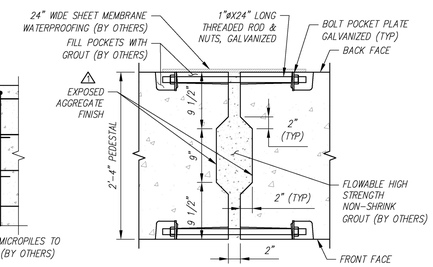


PEDESTAL JOINT DETAIL
SCALE: N.T.S.

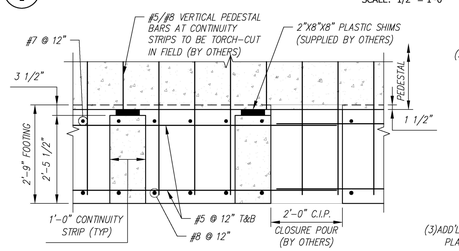


TYP. SECTION THROUGH CONTINUITY STRIPS
SCALE: 1/2" = 1'-0"

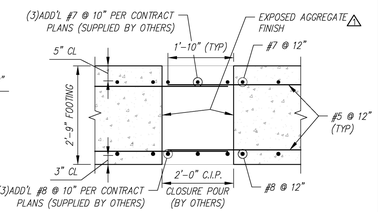


FOOTING CLOSURE POUR DETAIL
SCALE: 1/2" = 1'-0"

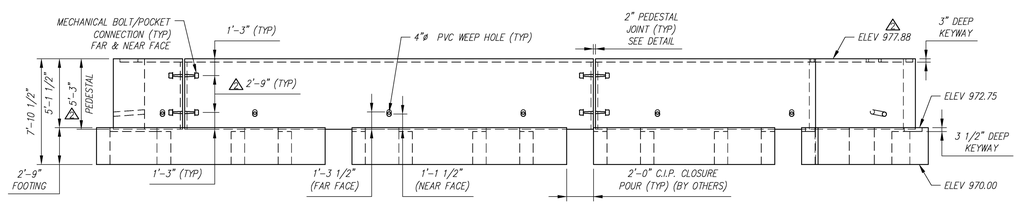


SOUTH FOOTING/PEDESTAL ELEVATION
SCALE: 3/16" = 1'-0"

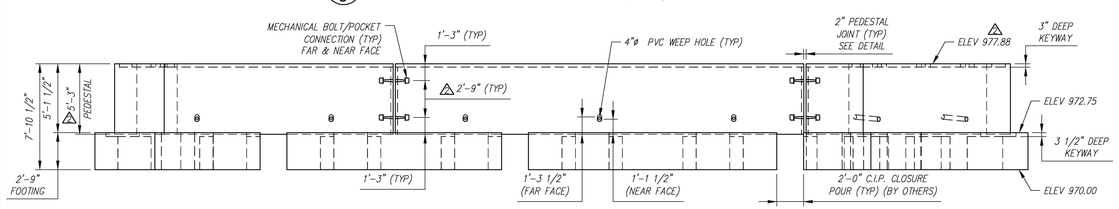


NORTH FOOTING/PEDESTAL ELEVATION
SCALE: 3/16" = 1'-0"

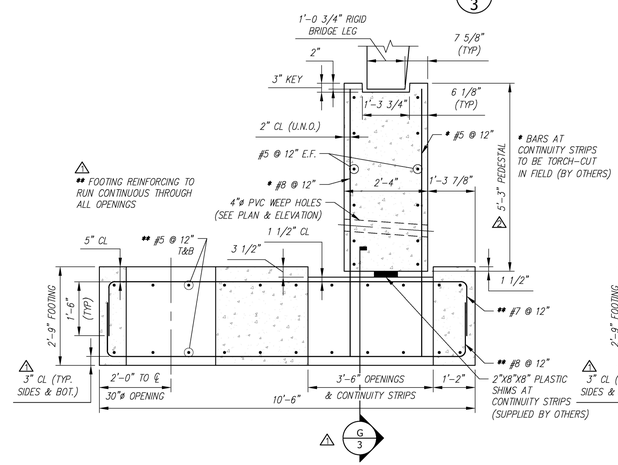


FOOTING & PEDESTAL SECTION (AT RIGID BRIDGE LEG)
SCALE: 1/2" = 1'-0"

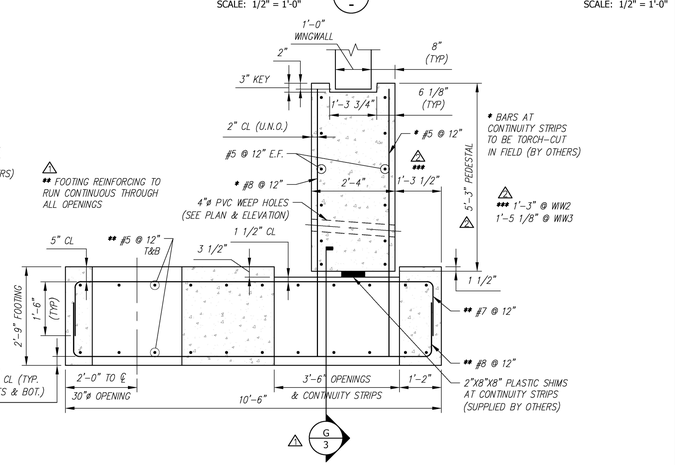


FOOTING & PEDESTAL SECTION (AT WINGWALLS)
SCALE: 1/2" = 1'-0"

Vermont Agency of Transportation
RECEIVED
ON: April 27, 2016
and Checked for
CONFORMANCE
BY: Rob Young DATE: 04/28/2016

| | |
|---|---|
| REVIEWED: | X |
| REVIEWED, REVISIONS NOTED: | |
| REVISE AND RESUBMIT | |
| NOT REVIEWED | |
| Date: 4/27/16 | |
| Signature: | |

Stantec

This review by Stantec Consulting Services Inc. is for the sole purpose of ascertaining conformance with the general design concept. This review shall not mean that Stantec Consulting Services Inc approves the detail design inherent in the shop drawings, responsibility for which shall remain with the Contractor. Submitting same, and such review shall not relieve the Contractor of his responsibility for errors or omissions in the shop drawing or of his responsibility for meeting all requirements of the Contract Documents. The contractor is responsible for dimensions to be confirmed and correlated at the job site, for information that pertains solely to the fabrication processes or to techniques of construction and installation and for coordination of the work of all subtrades.

INDICATES FOOTING BLOCKOUTS

Contractor is to verify that all information shown on drawings has been thoroughly checked, complies with the contract documents and is adequate to meet the field conditions. Some dimensions and details may differ slightly from contract drawings to accommodate the manufacturing or design process. Approval of this drawing indicates that any deviation from the contract documents has been reviewed and found to be acceptable. Production will not commence until receipt of signed, approved shop drawings.

This drawing contains information proprietary to CONCRETE SYSTEMS, INC. This drawing is disclosed with the understanding that it will be retained in confidence and its use limited solely to the purpose for which it is disclosed. It is understood that no reproduction of this drawing is authorized without permission from CONCRETE SYSTEMS, INC. and that it will be returned to CONCRETE SYSTEMS, INC. upon request.

| Rev. | Date | DESCRIPTION | By |
|---|---|---|---|
| 10 | | | |
| 9 | | | |
| 8 | | | |
| 7 | | | |
| 6 | | | |
| 5 | | | |
| 4 | | | |
| 3 | | | |
| 2 | | | |
| 1 | 04/08/2016 | SEE REV 1 TRIANGLES. | AK |

REVISIONS

This drawing is based upon information provided from the following documents and/or sources:
Engineer: STANTEC CONSULTING SERVICES, INC.
Project No:
Drawings: PROJECT PLANS
Specifications:
Other Sources:

Concrete Systems Inc.
9 Commercial St., Hudson, NH,03051
Phone 603-889-4163
Fax 603-889-2417

STATE AGENCY
VTrans Working to Get You There

| | | |
|---|---|---|
| Drawn By | A KOSTENKO | Date 03/03/2016 |
| Reviewed By | | Date |
| Approved By | | Date |

VTAOT PROJ. NO.: BRF 0151(21)

MILLER CONSTRUCTION, INC.
ROUTE 106 BRIDGE REPLACEMENT T.H. 61 (KENDALL ROAD)
WOODSTOCK, VT

D — FOOTING/PEDESTAL PLAN AND DETAILS — REV 1
Drawing No. R-S22624-L01C
Quantity: Project No: SHEET 3 OF 4