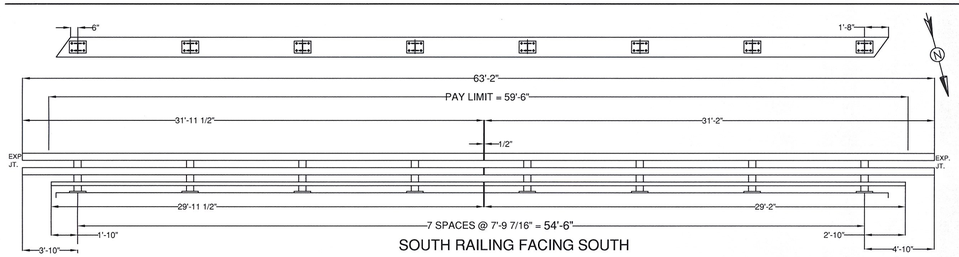

SOUTH RAILING FACING SOUTH

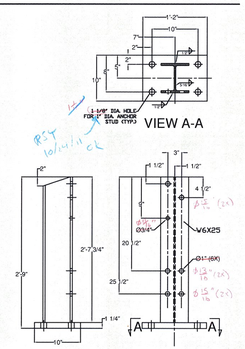

No mention of washers (plate or lock). Nut tightening should include OK.

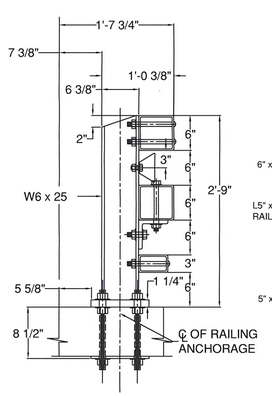

TYPICAL SECTION

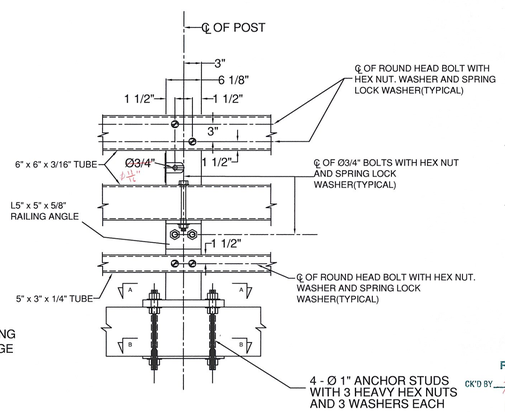

TYPICAL ELEVATION

BILL OF MATERIAL-SOUTH RAIL

QTY	DESCRIPTION	ASTM DESIGNATION
8	THREE RAIL POST @ 2'-9" OA	A572 Gr. 50
1	3" X 5" X 1/4" RAIL @ 29'-11 1/2"	A500 Gr. B
1	3" X 5" X 1/4" RAIL @ 29'-2"	A500 Gr. B
2	6" X 6" X 3/16" RAIL @ 31'-11 1/2"	A500 Gr. B
2	6" X 6" X 3/16" RAIL @ 31'-2"	A500 Gr. B
1	2-1/8" X 4-1/4" FIX. SPL. BAR @ 2'-3"	A572 Gr. 50
2	5" X 5" X 5/16" FIX. TUBE SPLICE @ 2'-3"	A500 Gr. B, A36
8	3/8" X 10" X 14" ANCHOR PLATES	A36
32	@ 1" X 15" ANCHOR STUDS	A449 Gr. 1
96	@ 1" HEAVY HEX NUTS & FLAT WASHERS	A563 & F436
32	@ 7/8" X 8" ROUND HEAD BOLT, NUT, SQ. WASHER, L.W.	A449, A563, ASME B18.21.1
8	@ 3/4" X 8" HEX BOLT, NUT, (2) F.W., & L.W.	A325, A563, F436, & ASME B18.21.1
16	@ 3/4" X 2-3/4" HEX BOLT, NUT, (2) F.W., & L.W.	A325, A563, F436, & ASME B18.21.1
8	@ 3/4" X 7-1/2" HEX BOLT, NUT, & (2) F.W.	A325, A563, & F436
4	@ 3/4" X 4-1/2" HEX BOLT, NUT, & (2) F.W.	A325, A563, & F436
8	@ 5/8" X 1-1/2" HEX BOLT, NUT, & (2) F.W.	A325, A563, & F436
8	L5" X 5" X 5/8" RAILING ANGLE (3) 5'-6 3/8"	A36
8	DELINEATORS	ALUMINUM, B-209 ALLOY
6	15" X 10" X 1" BASE PLATES	A36
6	4" X 4" FIX FILL PLATES @ 2'-2"	A572 Gr.50

ITEM #: 900.640 GEN CONTR: F.R. Lafayette

SHEET 1 OF 3

RECEIVED
OCT 1 3 2011

APPROVED BY:
CK'D BY ___ OK'D BY CER
RESUBMIT ___ APPROVED As Noted
BY RSY DATE 10/18/2011

BRIDGE RAIL DETAILS SHEET

ROUTE 12A, BR 15 & BR 22
TOWN OF ROXBURY, WASHINGTON COUNTY, VT

R	NO.	DATE	DESCRIPTION	BY
C				
V				

R	NO.	DATE	DESCRIPTION	BY
C				
V				

ELDERLEE, INC.
OAKS CORNERS, NEW YORK 14518
E-Mail: dlong@elderlee.com
Tel: 315-789-6670 Fax: 315-789-6615

DRAWN	E.P.	10/11/11
CHECKED	D.L.	10/11/11
APPROVED		
SCALE	SCHEMATIC	
DRAWING NO.	FR Lafayette EM11-220	