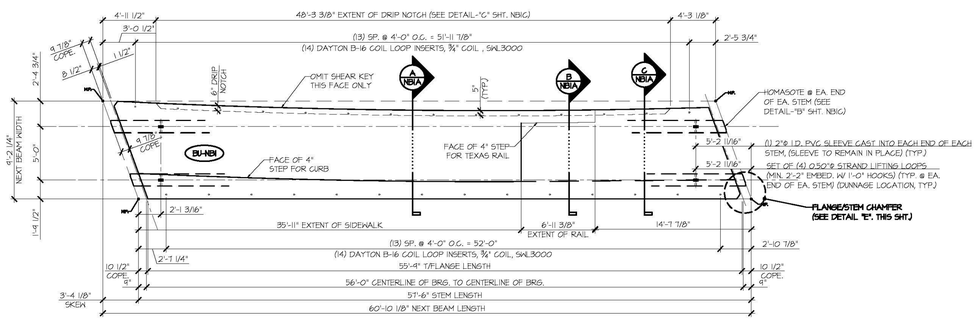

1 NBIA DIMENSIONAL PLAN VIEW IN FORM

3/8" = 1'-0"

- SEE DETAIL "1/NBIB" FOR SIDEWALK, DRIVEWAY & RAILING LAYOUT & REINFORCEMENT DETAILS
- SEE DETAIL "2/NBIB" FOR CURVED FLANGE LAYOUT

Vermont Agency of Transportation
RECEIVED
CK'D BY _____ OK'D BY _____
April 6, 2015
RESUBMIT No Approved AsNoted
BY Rob Young DATE 04/13/2015

SHOP DRAWING REVIEW

☐ REVIEWED AS REQUIRED BY THE CONSTRUCTION CONTRACT DOCUMENTS AND APPROVED, BUT ONLY FOR CONFORMANCE TO THE DESIGN CONCEPT OF THE WORK, AND SUBJECT TO FURTHER LIMITATIONS AND REQUIREMENTS CONTAINED IN THE CONSTRUCTION CONTRACT DOCUMENTS.

☐ REJECTED ☐ REVISE AND RESUBMIT ☒ APPROVED AS NOTED

CORRECTIONS OR COMMENTS MADE ON THE SHOP DRAWINGS DURING THIS REVIEW DO NOT RELIEVE CONTRACTOR FROM COMPLIANCE WITH REQUIREMENTS OF THE DRAWINGS AND SPECIFICATIONS. THIS CHECK IS ONLY FOR REVIEW OF GENERAL CONFORMANCE WITH THE DESIGN CONCEPT OF THE PROJECT AND GENERAL COMPLIANCE WITH THE INFORMATION GIVEN IN THE CONTRACT DOCUMENTS. THE CONTRACTOR IS RESPONSIBLE FOR CONFIRMING AND CORRELATING ALL QUANTITIES AND DIMENSIONS, SELECTING FABRICATION PROCESSES AND TECHNIQUES OF CONSTRUCTION, COORDINATING THEIR WORK WITH THAT OF ALL OTHER TRADES, AND PERFORMING THEIR WORK IN A SAFE AND SATISFACTORY MANNER.

CLD Consulting Engineers, 540 Commercial Street, Manchester, NH 03101, 603-669-8223
Job Number: 12.0121
Reviewed by: SRB
Date: 04/10/2015

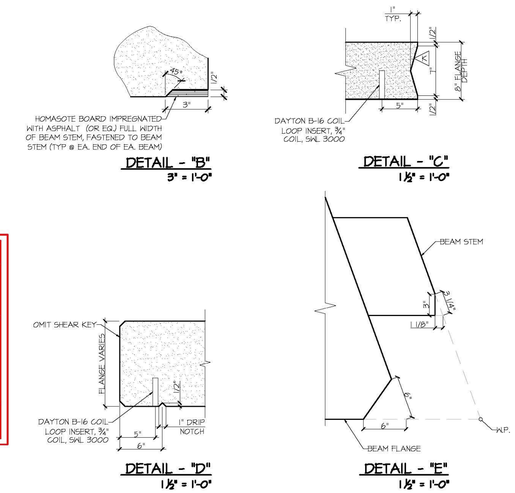

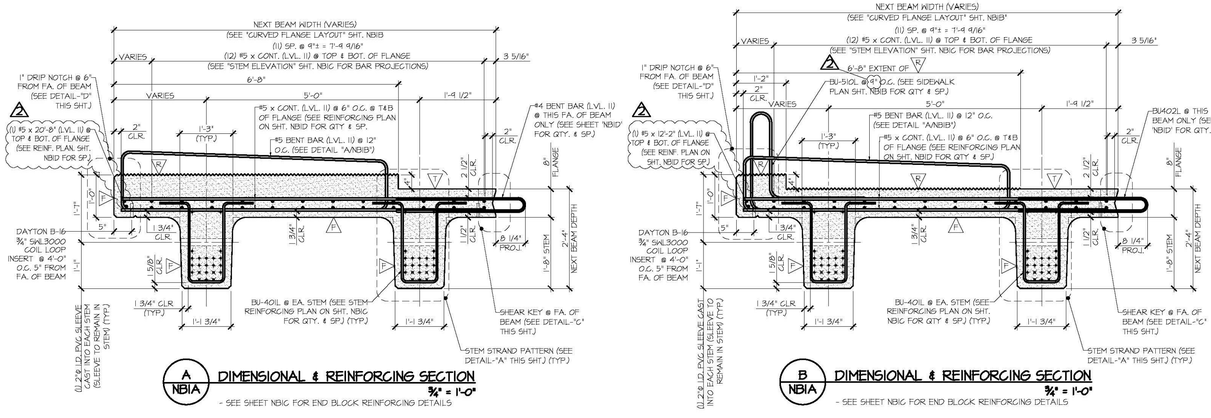

A NBIA DIMENSIONAL & REINFORCING SECTION

3/4" = 1'-0"

- SEE SHEET NBIG FOR END BLOCK REINFORCING DETAILS

B NBIA DIMENSIONAL & REINFORCING SECTION

3/4" = 1'-0"

- SEE SHEET NBIG FOR END BLOCK REINFORCING DETAILS

C NBIA DIMENSIONAL & REINFORCING SECTION

3/4" = 1'-0"

- SEE SHEET NBIG FOR END BLOCK REINFORCING DETAILS

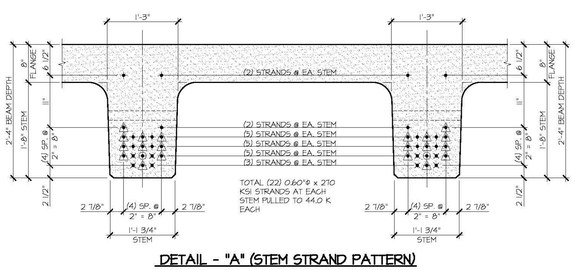

DETAIL - "A" (STEM STRAND PATTERN)

1" = 1'-0"

PRESTRESSING NOTATIONS

- + DENOTES STRAIGHT STRAND TO BE CUT FLUSH WITH EA. END OF EA. STEM
- × DENOTES STRAIGHT STRAND TO EXTEND 2'-0" FROM EA. END OF EA. STEM
- ⊕ DENOTES STRAIGHT STRANDS TO BE DEBONDED 2'-0" FROM EA. END OF EA. STEM
- △ DENOTES STRAIGHT STRANDS TO BE DEBONDED 0'-6" FROM EA. END OF EA. STEM

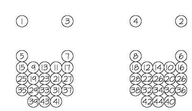

DETENSIONING SCHEDULE

N.T.S.

- F DENOTES FORM FINISH
- T DENOTES SMOOTH SCREED FINISH
- R DENOTES ROUGHENED FINISH (1/8" AMPLITUDE)
- R DENOTES ROUGHENED FINISH (1/4" RAKE)

MARK: BU-NBI	QTY.: 1	WT: 47.52 T	VOL: 23.47 CY

APPROVAL STAMP:

J.P. CARRARA & SONS INC.
Precast & Prestress Manufacturer
2464 DOE STR., MIDDLEBURY, VERMONT 05753 Phone:(802)388-6361 Fax:(802)388-8010

T. BUCK CONSTRUCTION, INC.
CONTRACTOR
AUBURN, MAINE

STATE OF VERMONT AGENCY OF TRANSPORTATION
COUNTY OF CALEDONIA

TOWN OF BURKE
VERMONT ROUTE 114
BRIDGE NO.: 13 PROJECT NO.: BRF 0269(13)

PRESTRESSED NEXT BEAM DETAILS

DATE: MAR. 26, 2015	
SCALE: NOTED	
CHKD:	DFTM: JDK
JOB NO: 23454-015	
DWG. NO: NBIA	