BACK VIEW

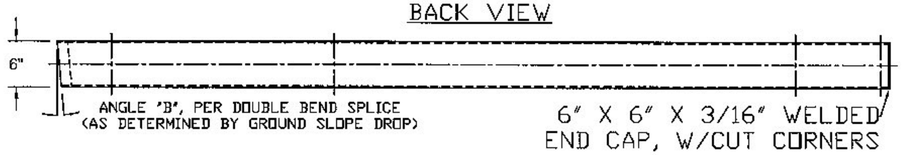

TOP VIEW

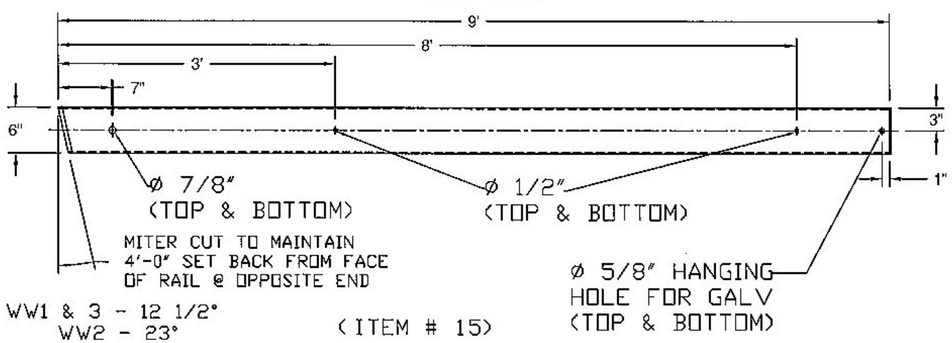

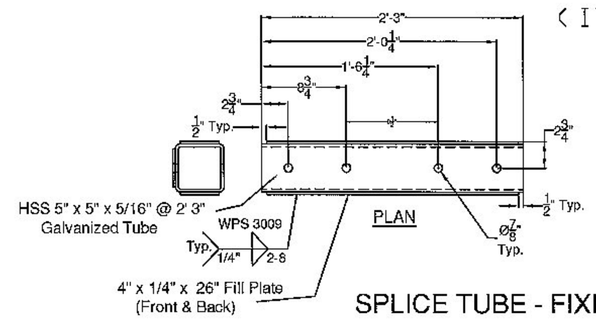

(ITEM # 7)

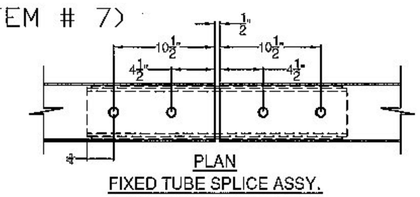

SPLICE TUBE - FIXED

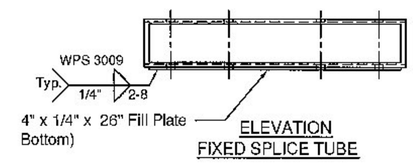

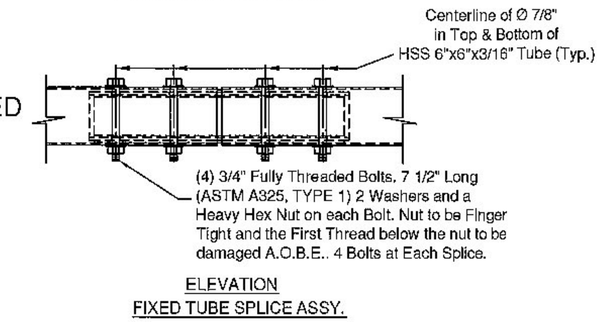

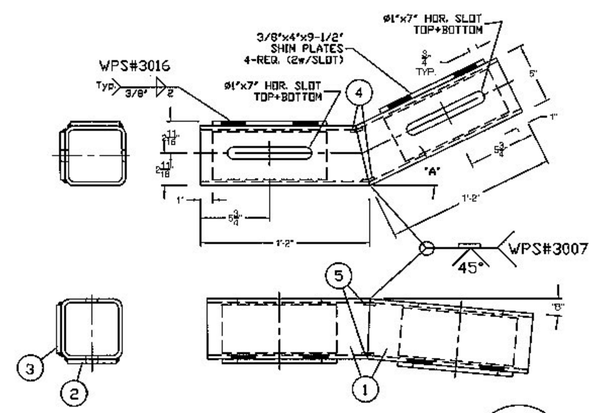

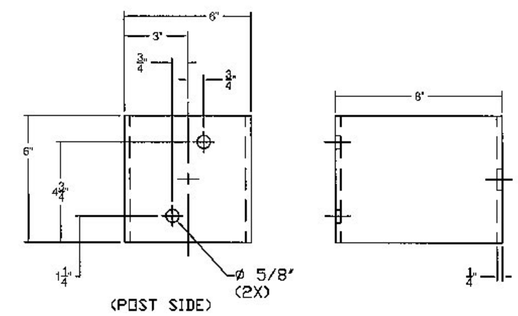

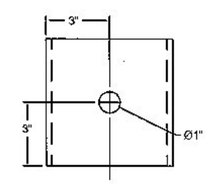

(ITEM # 13)

(RAIL SIDE)

DOUBLE BEND TUBE SPLICE		
ITEM#	QTY.	DESCRIPTION
1	1	5" X 5" X 5/16" TUBE @ 26 3/4"
2	2	3/8" X 4" X 9 1/2" W/ SLOTS-ASTM A36&A709 Gr36&CVN
3	2	3/8" X 4" X 9 1/2" W/O SLOTS-ASTM A36&A709 Gr36&CVN
4	2	3/16" X 1" X 3 5/8" BACKER PLATE, FORMED
5	2	3/16" X 1" X 4" BACKER PLATE

'A' - WW1 & 3 - 25°, WW2 - 46°
'B' - TURN DOWN ANGLE SET BY THE 9' MEASURMENT
AT THE END OF THE BOX BEAM.

(ITEM # 12)

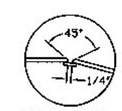

Welding Detail
WPS 3007

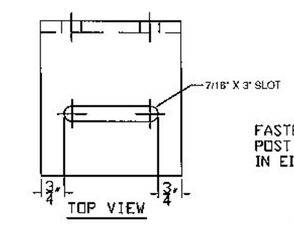

FASTEN SHELF ANGLE TO
POST W/ (1) 1/2" BOLT
IN EITHER Ø5/8" HOLE

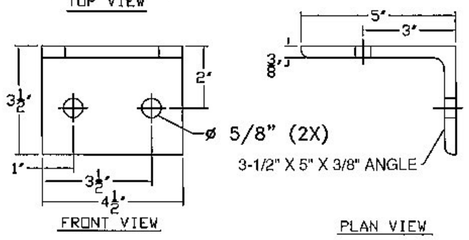

(ITEM # 10)

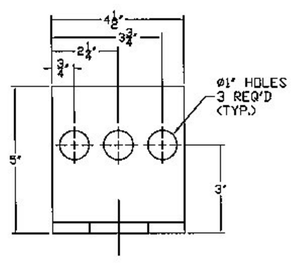

(ITEM # 11)

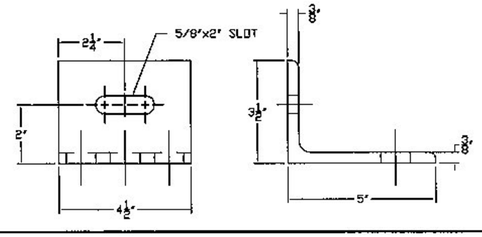

SHOP DRAWING REVIEW

☐ REVIEWED AS REQUIRED BY THE CONSTRUCTION CONTRACT DOCUMENTS AND APPROVED, BUT ONLY FOR CONFORMANCE TO THE DESIGN CONCEPT OF THE WORK, AND SUBJECT TO FURTHER LIMITATIONS AND REQUIREMENTS CONTAINED IN THE CONSTRUCTION CONTRACT DOCUMENTS.

☐ REJECTED ☐ REVISE AND RESUBMIT ☒ APPROVED AS NOTED

CORRECTIONS OR COMMENTS MADE ON THE SHOP DRAWINGS DURING THIS REVIEW DID NOT RELIEVE CONTRACTOR FROM COMPLIANCEWITH REQUIREMENTS OF THE DRAWINGS AND SPECIFICATIONS. THIS CHECK IS ONLY FOR REVIEW OF GENERAL CONFORMANCE WITH THE DESIGN CONCEPT OF THE PROJECT AND GENERAL COMPLIANCE WITH THE INFORMATION GIVEN IN THE CONTRACT DOCUMENTS. THE CONTRACTOR IS RESPONSIBLE FOR: CONFIRMING AND CORRELATING ALL QUANTITIES AND DIMENSIONS; SELECTING FABRICATION PROCESSES AND TECHNIQUES OF CONSTRUCTION; COORDINATING THEIR WORK WITH THAT OF ALL OTHER TRADES; AND PERFORMING THEIR WORK IN A SAFE AND SATISFACTORY MANNER.

CLD Consulting Engineers
940 Commercial Street
Manchester, NH 03101
603-668-8223

Job Number: 120121
Reviewed by: SRB
Date: 3/23/2015

Vermont Agency of Transportation
RECEIVED
ON: February 25, 2015
and Checked for
CONFORMANCE
BY: Rob Young DATE: 03/23/2015

ITEM #: 621.72

STRUCTURAL STEEL TO
COMPLY W/ ASTM A6

TOLERANCE UNLESS
OTHERWISE NOTED:
FRACTIONS = ± 1/16"
ANGLES = ± 1/2°
DIAMETERS = ± 1/32"

SHEET 3 OF 5

Galvanized 2-Rail Box Beam Guardrail Approach Section

EM14-277, VT ROUTE 114 (MAJOR COLLECTOR) BRIDGE #13
PROJECT: BURKE BRF 0269 (13), TOWN OF BURKE, CALEDONIA COUNTY, VT

REV	NO.	DATE	DESCRIPTION	BY	REV	NO.	DATE	DESCRIPTION	BY

ELDERLEE, INC.
OAKS CORNERS, NEW YORK 14518
E-Mail: dlong@elderlee.com / epeek@elderlee.com
Tel: 315-789-6670 Fax: 315-789-6616

AISC CERTIFIED FABRICATOR

DRAWN	E.P.	2/16/17
CHECKED	D.L.	2/20/15
APPROVED	M.V.	.
SCALE	SCHEMATIC	
DRAWING NO.	FR L - BORRETTI-T	