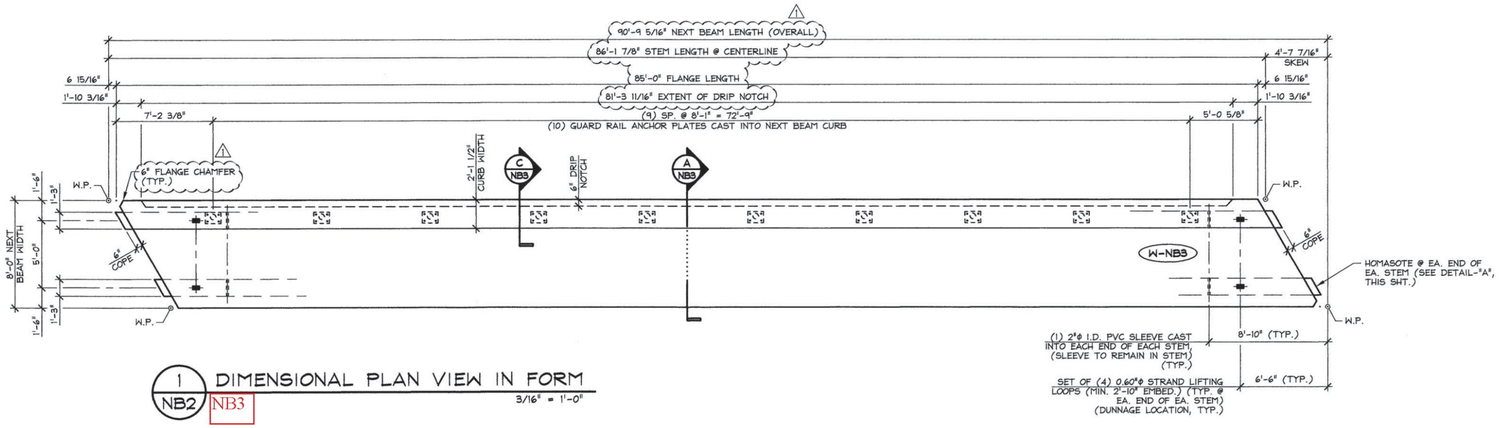

1 NB2 NB3 DIMENSIONAL PLAN VIEW IN FORM

3/16" = 1'-0"

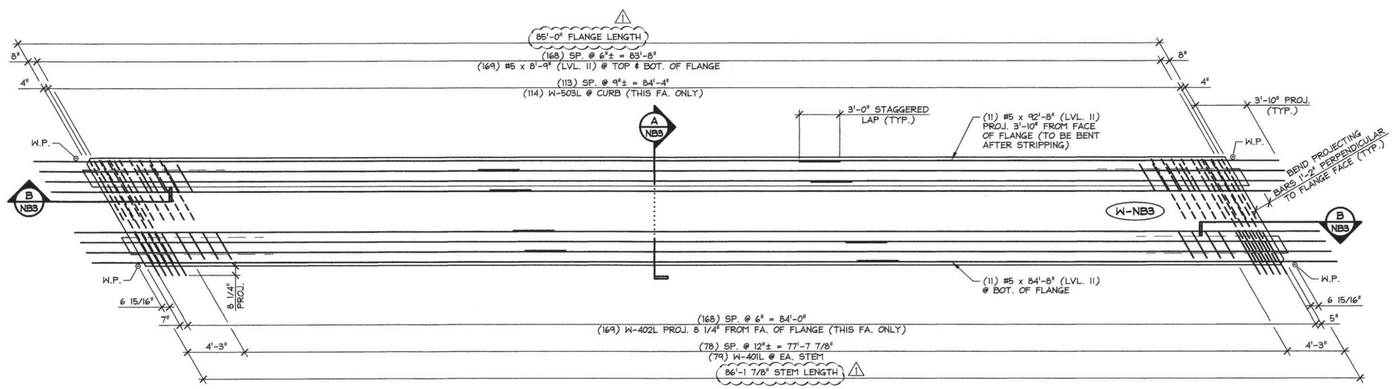

2 NB3 REINFORCING PLAN VIEW IN FORM

ALL DIMENSIONS INDICATED ARE PARALLEL OR PERPENDICULAR TO ℄ OF STEMS (U.N.O.)

3/16" = 1'-0"

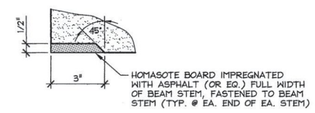

DETAIL - "A"

3" = 1'-0"

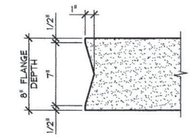

DETAIL - "B"

1 1/2" = 1'-0"

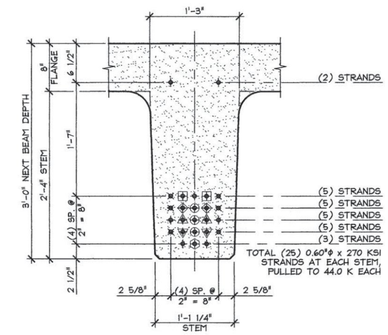

PRESTRESSING NOTATIONS

- ✦ DENOTES STRAIGHT STRANDS TO BE CUT FLUSH WITH EA. END OF EA. STEM
- ✖ DENOTES STRAIGHT STRANDS TO PROJECT 1'-6" FROM EA. END OF EA. STEM
- ⊕ DENOTES STRAIGHT STRANDS TO BE DEBONDED 6" FROM EA. END OF EA. STEM
- ⊞ DENOTES STRAIGHT STRANDS TO BE DEBONDED 10'-0" FROM EA. END OF EA. STEM
- ◈ DENOTES STRAIGHT STRANDS TO BE DEBONDED 14'-0" FROM EA. END OF EA. STEM
- ♣ DENOTES STRAIGHT STRANDS TO BE DEBONDED 16'-0" FROM EA. END OF EA. STEM
- ♥ DENOTES STRAIGHT STRANDS TO BE DEBONDED 18'-0" FROM EA. END OF EA. STEM
- ⊕ DENOTES STRAIGHT STRANDS TO BE DEBONDED 20'-0" FROM EA. END OF EA. STEM

DETAIL - "C" (STEM STRAND PATTERN)

1" = 1'-0"

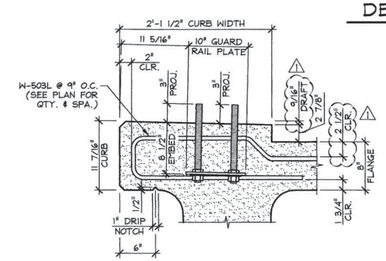

C NB3 CURB & GUARD RAIL ANCHOR PLATE SECTION

TYP. BEAM REINF. NOT SHOWN FOR CLARITY

1" = 1'-0"

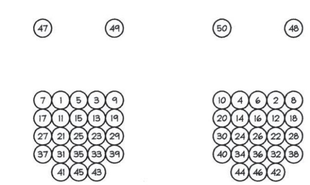

DETENSIONING SCHEDULE

N.T.S.

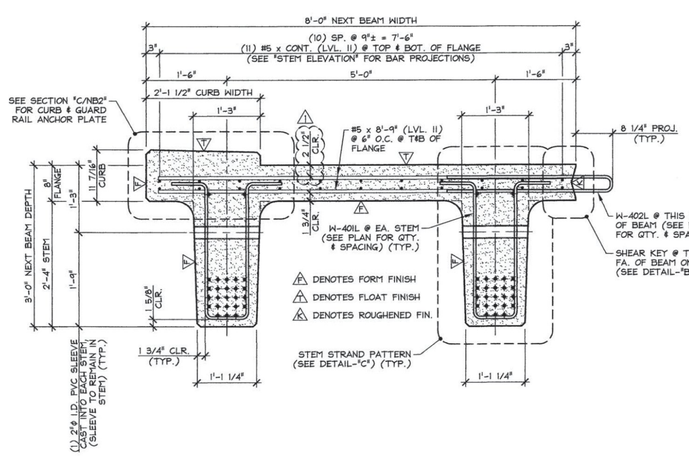

A NB3 DIMENSIONAL & REINFORCING SECTION

3/4" = 1'-0"

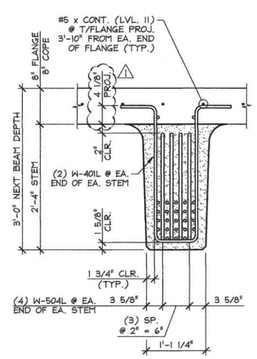

STEM SECTION

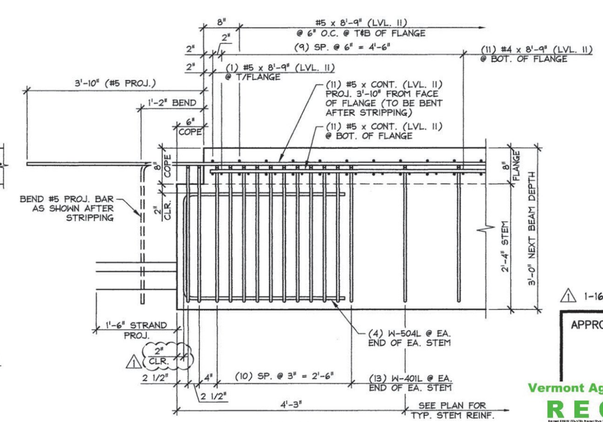

STEM ELEVATION

B NB3 END BLOCK STEM REINFORCING DETAILS

3/4" = 1'-0"

△1 1-16-14 REVISED AS NOTED

MARK: W-NB3	QTY.: 1	WT.: 73.38 T	VOL.: 36.24 cy

MATERIAL LIST / NEXT BEAM

ITEM	MARK	DESCRIPTION	QTY.
1	W-401L	#4 BENT BAR (LEVEL II, DUAL COATED)	210
2	W-402L	#4 BENT BAR (LEVEL II, DUAL COATED)	169
3		#4 x 8'-9" (LEVEL II, DUAL COATED)	22
4			
5	W-503L	#5 BENT BAR (LEVEL II, DUAL COATED)	114
6	W-504L	#5 BENT BAR (LEVEL II, DUAL COATED)	16
7		#5 x 8'-9" (LEVEL II, DUAL COATED)	340
8		#5 x 92'-8" (W/ (1) 2'-6" STAGGERED LAP) (LVL. II, DUAL COATED)	11
9		#5 x 84'-8" (W/ (1) 2'-6" STAGGERED LAP) (LVL. II, DUAL COATED)	11
10			
11			
12			
13		GUARD RAIL ANCHOR PLATE (GALV.) (SUPPLIED BY OTHERS)	10
14		SET OF (4) 0.60"Φ x 270 KSI STRAND LIFTING LOOPS	4
15			

APPROVAL STAMP:

Vermont Agency of Transportation
RECEIVED
Materials & Research Section
CK'D BY JDG/JW OK'D BY WDL
January 27, 2014
RESUBMIT No Approved As Noted
BY KMH DATE 02/10/2014

J.P. CARRARA & SONS INC.
Precast & Prestress Manufacturer
2464 CASE STR., MIDDLEBURY, VERMONT 05753 Phone:(802)388-6361 Fax:(802)388-9010

MILLER CONSTRUCTION, INC.
CONTRACTOR
BARNARD, VERMONT

STATE OF VERMONT AGENCY OF TRANSPORTATION
COUNTY OF WINDSOR

TOWN OF BARNARD
VT ROUTE 12, MAJOR COLLECTOR
BRIDGE NO.: 25 PROJECT NO.: ER BRF 0241(39)

PRESTRESSED NEXT BEAM DETAILS

DATE: DEC. 18, 2013
SCALE: NOTED
CHKD: - DFTM: B.L.
JOB NO: 23413-013
DWG. NO: NB3

F:\VT-Bridges\23413-13 Barnard\23413-NB3.dwg, 1/16/2014 4:49:16 PM