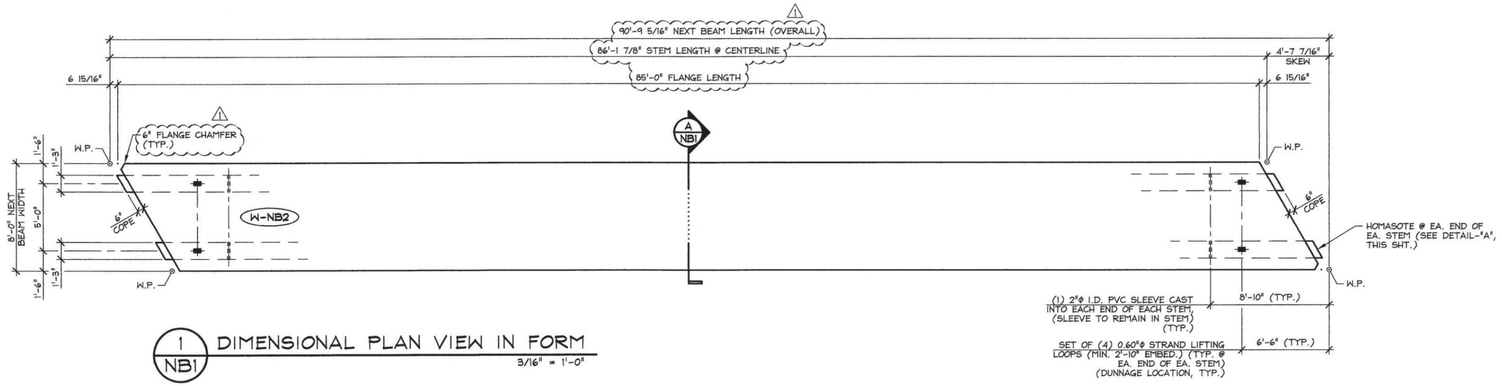

1 NB1 DIMENSIONAL PLAN VIEW IN FORM

3/16" = 1'-0"

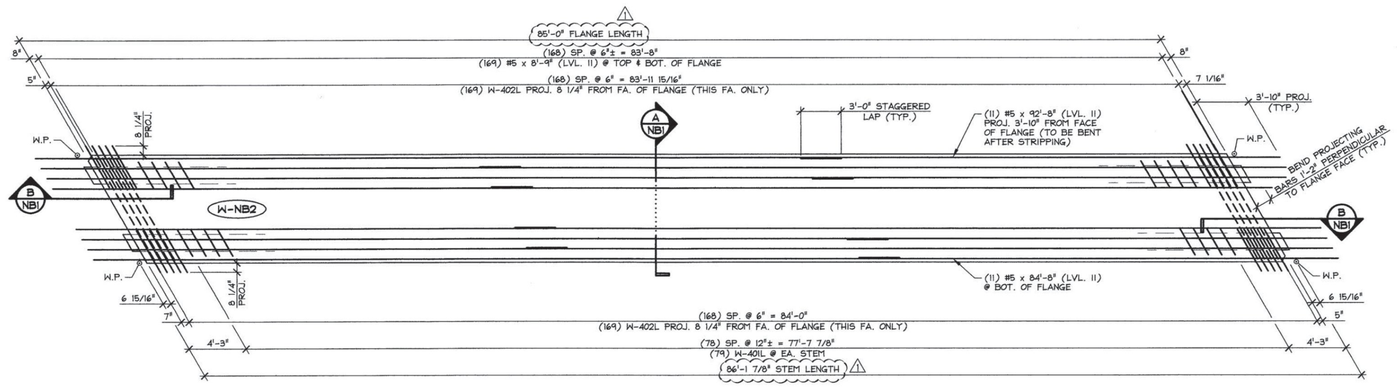

2 NB1 REINFORCING PLAN VIEW IN FORM

ALL DIMENSIONS INDICATED ARE PARALLEL OR PERPENDICULAR TO ℄ OF STEMS (U.N.O.)

3/16" = 1'-0"

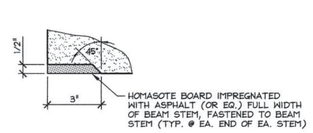

DETAIL - "A"

3" = 1'-0"

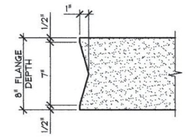

DETAIL - "B"

1 1/2" = 1'-0"

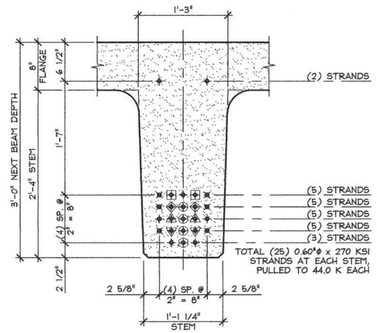

PRESTRESSING NOTATIONS

- ✦ DENOTES STRAIGHT STRANDS TO BE CUT FLUSH WITH EA. END OF EA. STEM
- ✖ DENOTES STRAIGHT STRANDS TO PROJECT 1'-6" FROM EA. END OF EA. STEM
- ⊕ DENOTES STRAIGHT STRANDS TO BE DEBONDED 6" FROM EA. END OF EA. STEM
- ⊞ DENOTES STRAIGHT STRANDS TO BE DEBONDED 10'-0" FROM EA. END OF EA. STEM
- ◈ DENOTES STRAIGHT STRANDS TO BE DEBONDED 14'-0" FROM EA. END OF EA. STEM
- ⚠ DENOTES STRAIGHT STRANDS TO BE DEBONDED 16'-0" FROM EA. END OF EA. STEM
- ⚠ DENOTES STRAIGHT STRANDS TO BE DEBONDED 18'-0" FROM EA. END OF EA. STEM
- ⊕ DENOTES STRAIGHT STRANDS TO BE DEBONDED 20'-0" FROM EA. END OF EA. STEM

DETAIL - "C" (STEM STRAND PATTERN)

1" = 1'-0"

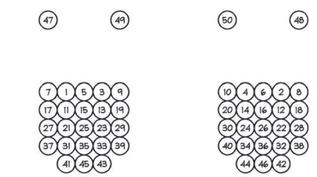

DETENSIONING SCHEDULE

N.T.S.

MARK: W-NB2	QTY.: 2	WT.: 69.67 T	VOL.: 34.41 cy

MATERIAL LIST / NEXT BEAM

ITEM	MARK	DESCRIPTION	QTY.
1	W-401L	#4 BENT BAR (LEVEL II, DUAL COATED)	210
2	W-402L	#4 BENT BAR (LEVEL II, DUAL COATED)	338
3		#4 x 8'-9" (LEVEL II, DUAL COATED)	22
4			
5	W-504L	#5 BENT BAR (LEVEL II, DUAL COATED)	16
6		#5 x 8'-9" (LEVEL II, DUAL COATED)	340
7		#5 x 92'-8" (W/ (1) 2'-6" STAGGERED LAP) (LVL. II, DUAL COATED)	11
8		#5 x 84'-8" (W/ (1) 2'-6" STAGGERED LAP) (LVL. II, DUAL COATED)	11
9			
10			
11			
12			
13			
14		SET OF (4) 0.60"ϕ x 270 KSI STRAND LIFTING LOOPS	4
15			

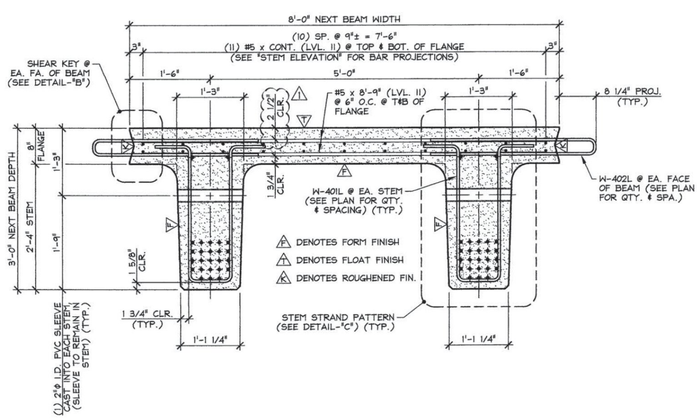

A NB1 DIMENSIONAL & REINFORCING SECTION

3/4" = 1'-0"

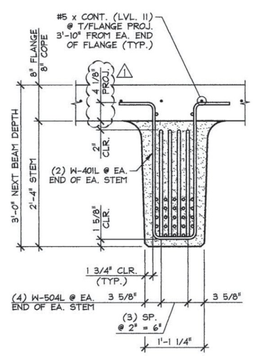

STEM SECTION

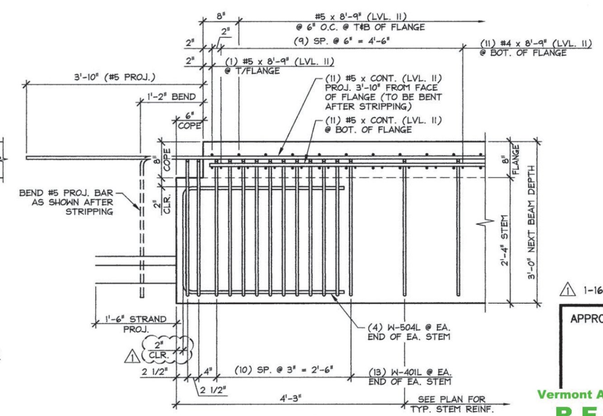

STEM ELEVATION

B NB1 END BLOCK STEM REINFORCING DETAILS

3/4" = 1'-0"

1-16-14 REVISED AS NOTED

APPROVAL STAMP:

Vermont Agency of Transportation
RECEIVED
CK'D BY JDG/JW OK'D BY WDL
January 27, 2014
RESUBMIT No Approved
BY KMH DATE 02/10/2014

J.P. CARRARA & SONS INC.
Precast & Prestress Manufacturer
2464 CASE STR., MIDDLEBURY, VERMONT 05753 Phone:(802)388-6361 Fax:(802)388-9010

MILLER CONSTRUCTION, INC.
CONTRACTOR
BARNARD, VERMONT

STATE OF VERMONT AGENCY OF TRANSPORTATION
COUNTY OF WINDSOR

DATE: DEC. 18, 2013
SCALE: NOTED

TOWN OF BARNARD
VT ROUTE 12, MAJOR COLLECTOR
BRIDGE NO.: 25 PROJECT NO.: ER BRF 0241(39)

CHKD: - DFTM: B.L.
JOB NO: 23413-013

PRESTRESSED NEXT BEAM DETAILS

DWG. NO: NB1

F:\VT-Bridges\23413-13 Barnard\23413-NB1.dwg, 1/16/2014 4:45:08 PM