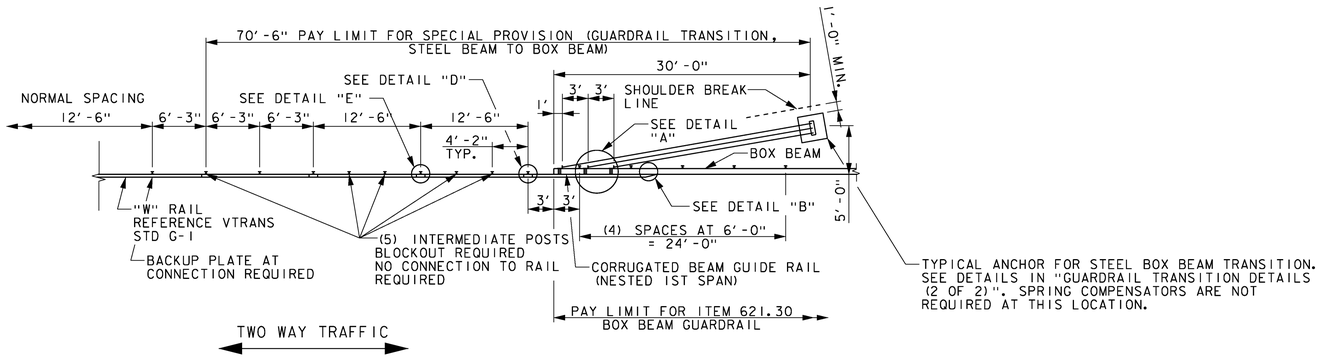

PLAN

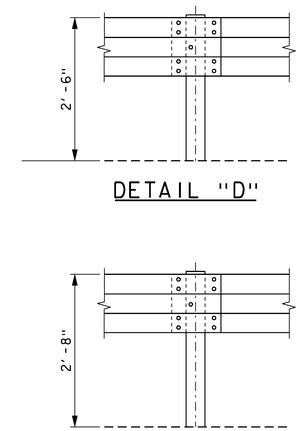

DETAIL "D"

DETAIL "E"
(FULL HEIGHT POST)
NOT TO SCALE

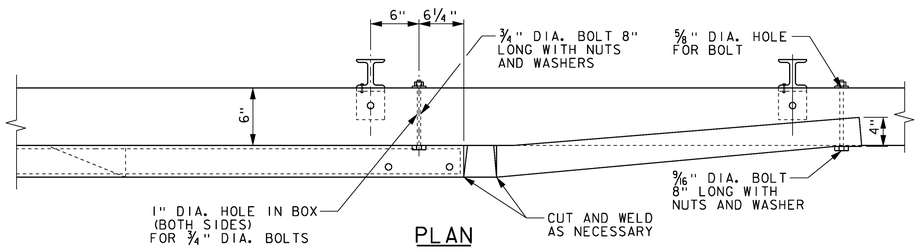

PLAN
DETAIL "B"
NOT TO SCALE

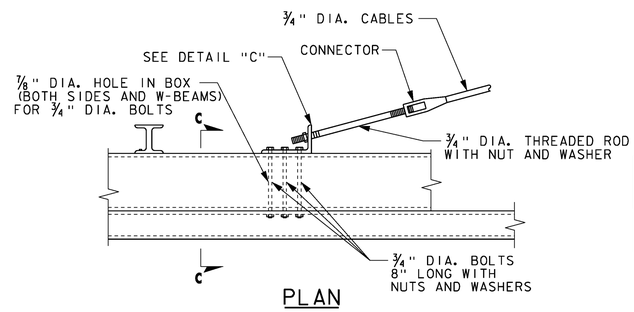

PLAN
DETAIL "A"
NOT TO SCALE

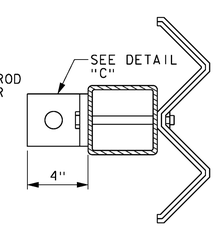

SECTION C-C
NOT TO SCALE

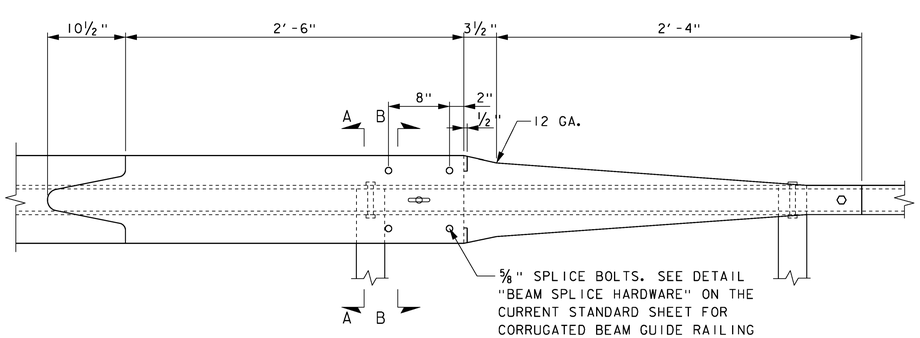

ELEVATION
DETAIL "B"
NOT TO SCALE

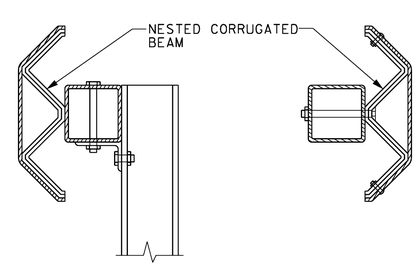

SECTION A-A
NOT TO SCALE

SECTION B-B
NOT TO SCALE

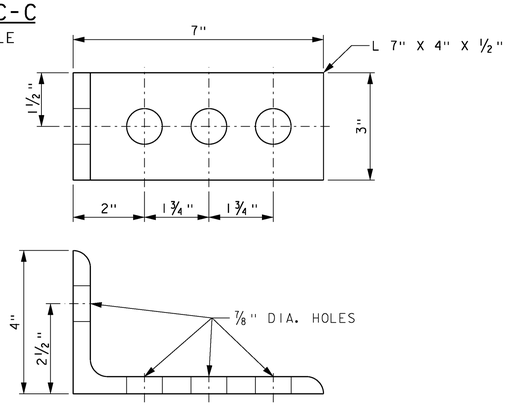

DETAIL "C"
NOT TO SCALE

PROJECT NAME: WARREN	
PROJECT NUMBER: BRF 013-4(32)	
FILE NAME: z10b424grdtls.dgn	PLOT DATE: 03-OCT-2013
PROJECT LEADER: R. YOUNG	DRAWN BY: P. DUSTIN
DESIGNED BY: D. KULL	CHECKED BY: T. KENDRICK
GUARDRAIL TRANSITION DETAILS (1 OF 2)	SHEET 11 OF 42

McFarland Johnson