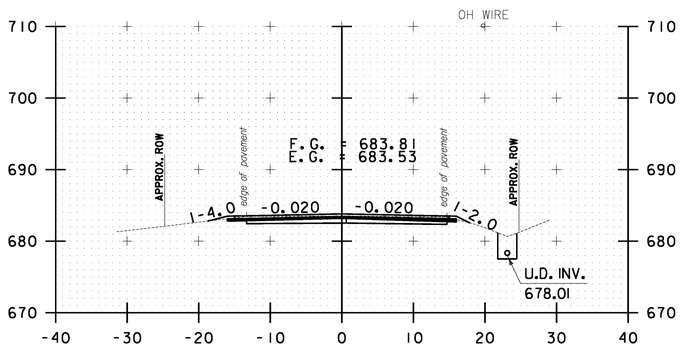

184+00.00

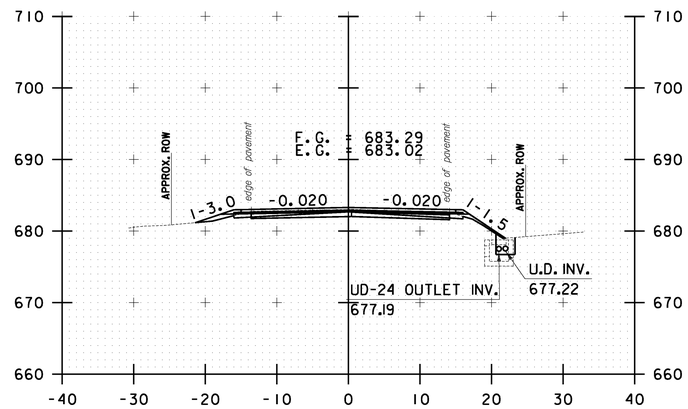

185+00.00

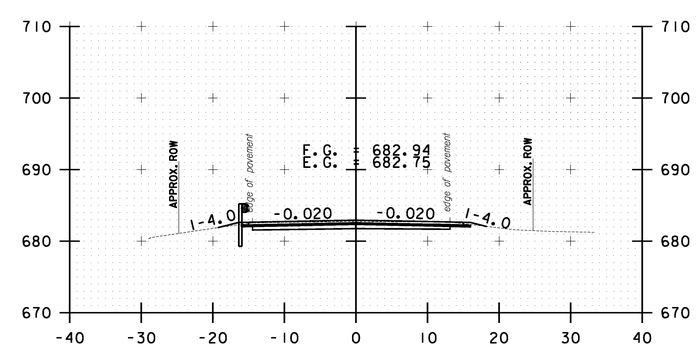

186+00.00

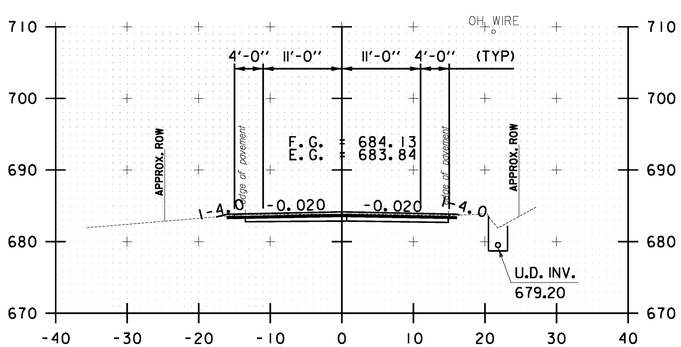

183+50.00

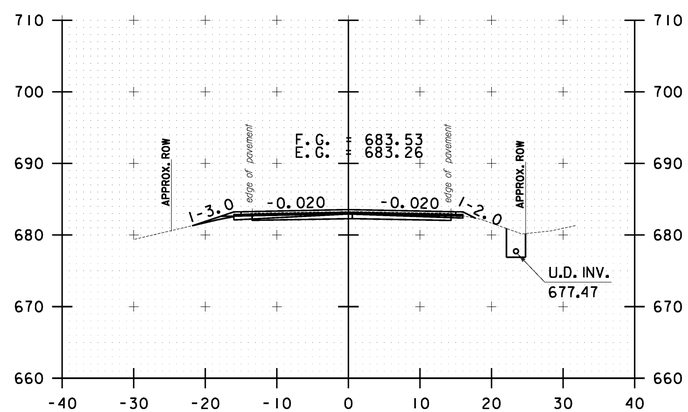

184+50.00

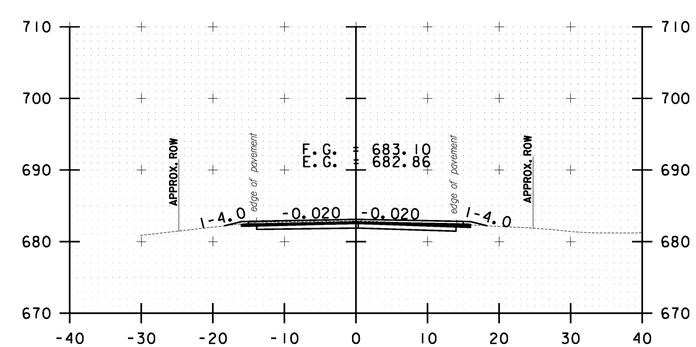

185+50.00

10 0 10
SCALE IN FEET

STOCKBRIDGE CROSS SECTION SHEET #57

PROJECT NAME: STOCKBRIDGE-BETHEL

PROJECT NUMBER: STP 2910(1)

FILE NAME: z10b214_stock_xc.dgn
PROJECT LEADER: D.E.G.
DESIGNED BY: L.M.B.
IPARM FILE: z10b214xs57.i

PLOT DATE: 3/17/2014
DRAWN BY: W.G.P.
CHECKED BY: J.P.S.
SHEET 270 OF 397

FILE NAME = V:\Projects\ANY\K2\22426\CADD_MSTN\z10b214_stock_xc.dgn
DATE/TIME = 3/17/2014
USER = 4916