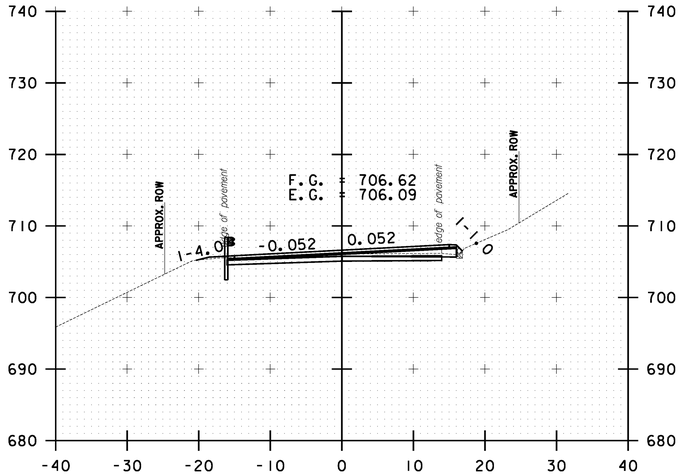

114+00.00

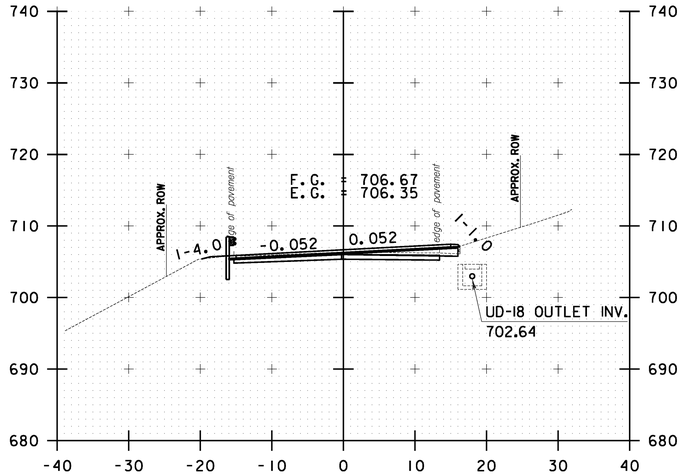

115+00.00

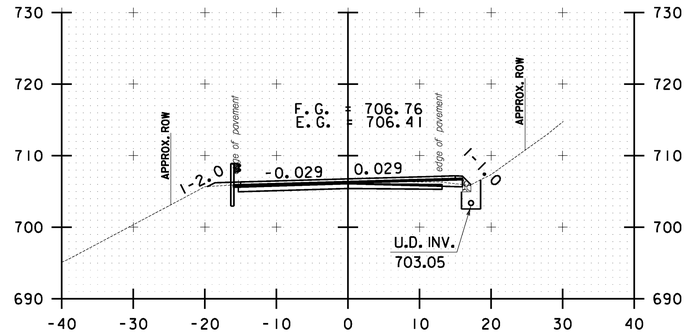

116+00.00

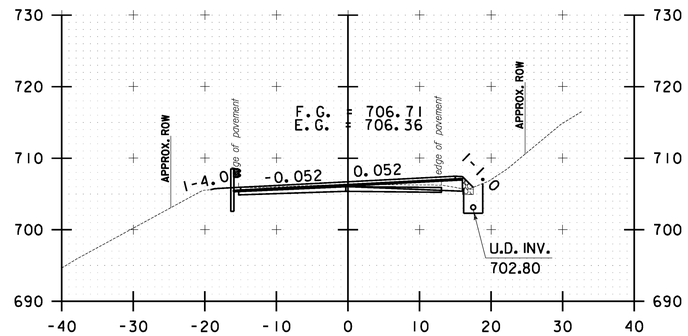

115+50.00

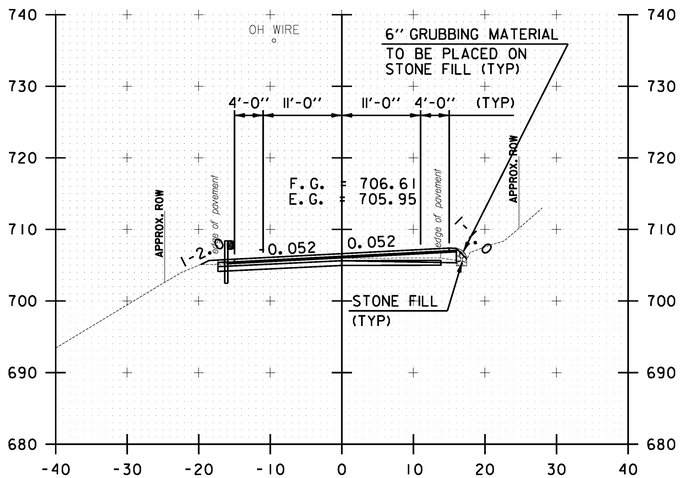

113+50.00

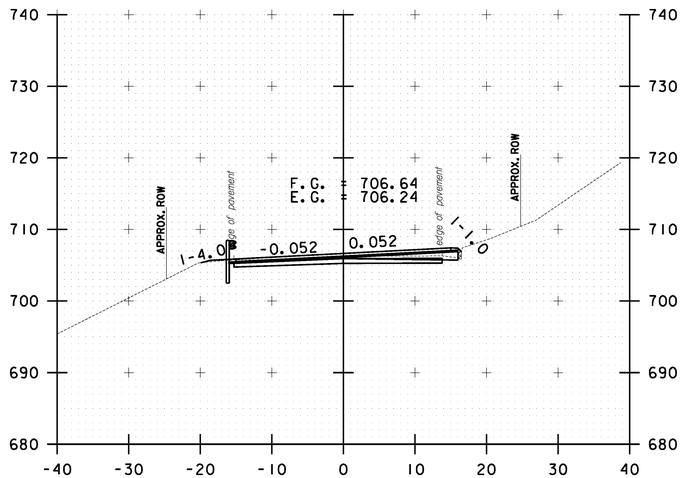

114+50.00

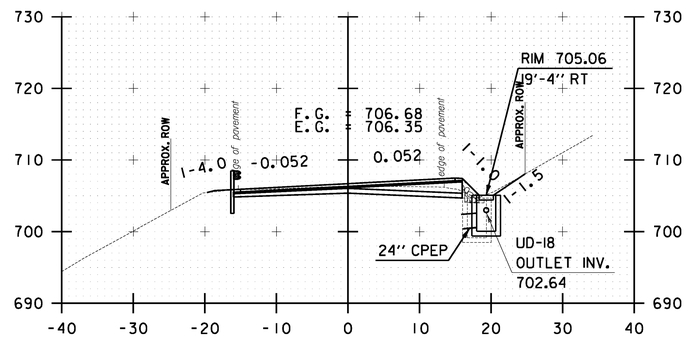

115+17.80

10 0 10
SCALE IN FEET

STOCKBRIDGE CROSS SECTION SHEET #38

PROJECT NAME: STOCKBRIDGE-BETHEL
PROJECT NUMBER: STP 2910(1)

FILE NAME: z10b214_stock_xc.dgn
PROJECT LEADER: D.E.G.
DESIGNED BY: L.M.B.
IPARM FILE: z10b214xs38.i

PLOT DATE: 3/17/2014
DRAWN BY: W.G.P.
CHECKED BY: J.P.S.
SHEET 251 OF 397

FILE NAME = V:\Projects\ANY\K2\22426\CADD_MSTN\z10b214_stock_xc.dgn
DATE/TIME = 3/17/2014
USER = 4916