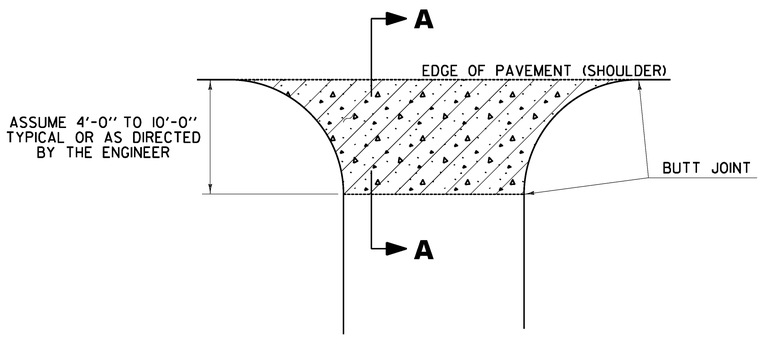

PLAN

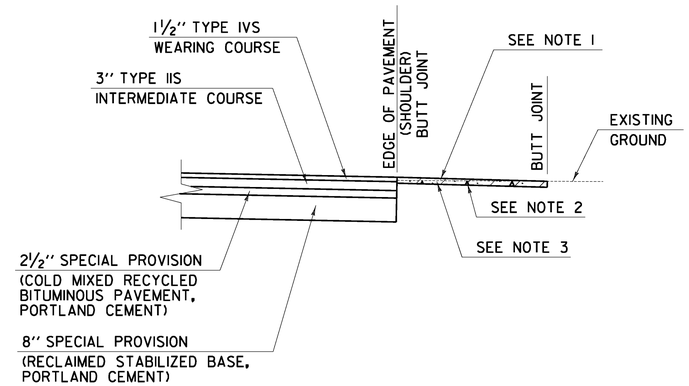

SECTION A-A
CUT SECTION

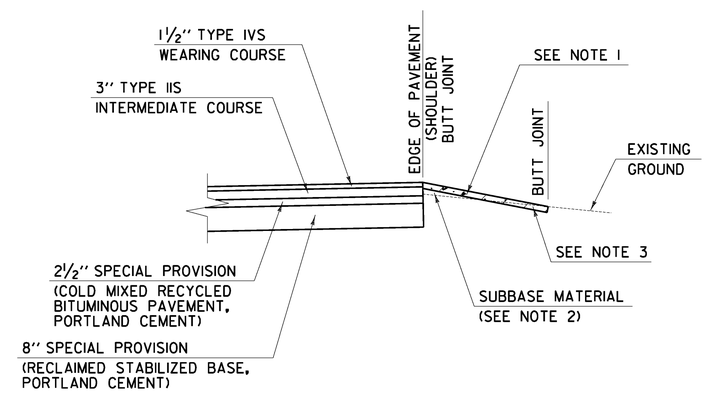

SECTION A-A
FILL SECTION

NOTES:

1. PAVING LIFT NOT TO EXCEED 2".
2. THE COST OF PLACING SUBBASE MATERIAL, SAW CUTTING, EMULSIFIED ASPHALT, CLEANING EXISTING PAVED SURFACES, INCLUDING POWER EQUIPMENT, AND FOR FILLING JOINTS, CRACKS AND HOLES WILL BE INCLUDED IN THE UNIT PRICE BID FOR ITEM 900.675 SPECIAL PROVISION (HAND-PLACED BITUMINOUS CONCRETE MATERIAL, DRIVES).
3. EXCAVATION OR COLD PLANING NEEDED TO ACHIEVE PROPER DRIVE SLOPES WILL BE INCLUDED IN THE UNIT PRICE BID FOR ITEM 900.675 SPECIAL PROVISION (HAND-PLACED BITUMINOUS CONCRETE MATERIAL, DRIVES).

LEGEND

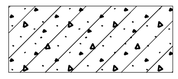

ITEM 900.675 SPECIAL PROVISION
(HAND-PLACED BITUMINOUS CONCRETE
MATERIAL, DRIVES)

DRIVEWAY HANDWORK DETAILS SHEET	PROJECT NAME: STOCKBRIDGE-BETHEL	
	PROJECT NUMBER: STP 2910(1)	
	FILE NAME: z10b214_dhd.dgn	PLOT DATE: 3/17/2014
	PROJECT LEADER: D.E.G.	DRAWN BY: W.G.P.
	DESIGNED BY: L.M.B.	CHECKED BY: J.P.S.
	IPARM FILE: z10b214dhd.i	SHEET 23 OF 397

FILE NAME = V:\Projects\ANY\K2\22426\CADD_MSTN\z10b214_dhd.dgn
DATE/TIME = 3/17/2014
USER = 4916