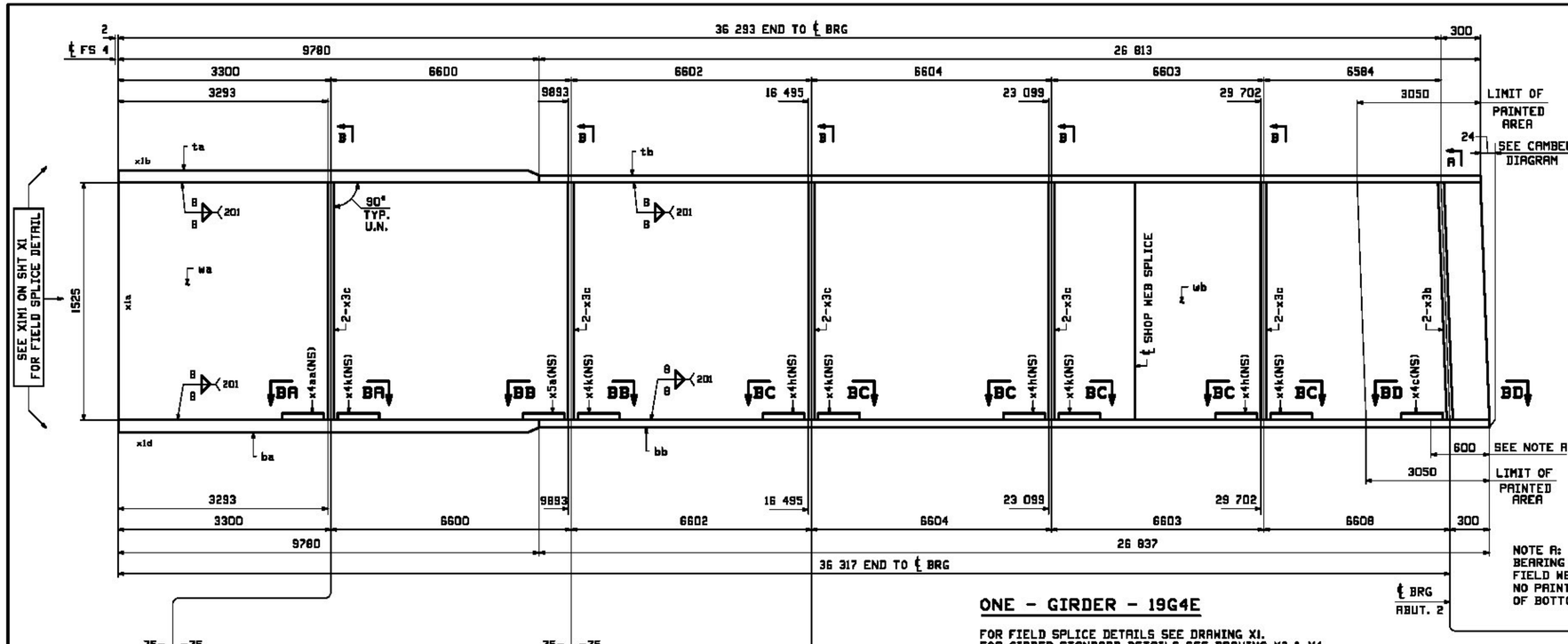


NOTE A:
BEARING AREA TO RECEIVE FIELD WELDED SOLE PLATE. NO PAINT BOTTOM & EDGES OF BOTTOM FLANGE.

## ONE - GIRDER - 19G4E

FOR FIELD SPLICE DETAILS SEE DRAWING X1.
FOR GIRDER STANDARD DETAILS SEE DRAWING X3 & X4.
FOR CAMBER & FLANGE DIAGRAMS SEE DRAWING C4.
FOR GENERAL NOTES SEE DRAWING GN1.
T2 DENOTES MATERIAL SUBJECT TO CHARPY V-NOTCH TESTING.

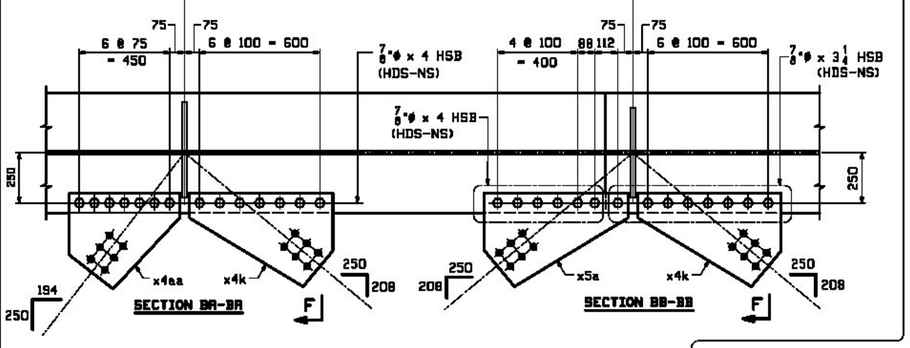


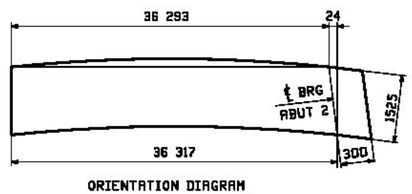


ORIENTATION DIAGRAM

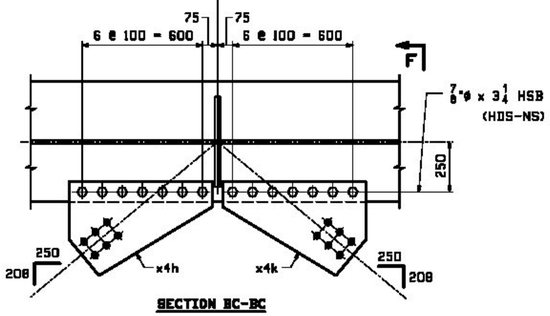


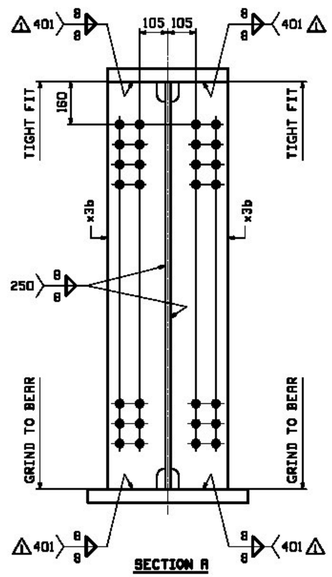


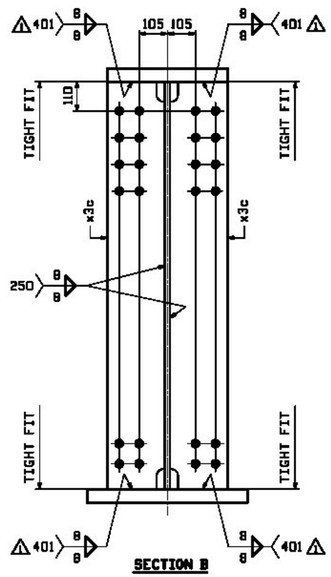


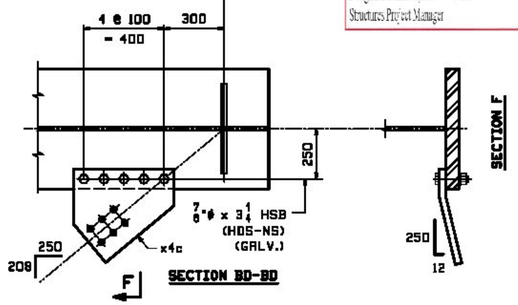


| FORM INFO PAGE | LINE | SHOP MARK | QTY | MARK | MATERIAL | LENGTH m | LENGTH mm | REMARKS | WT | PROCUREMENT NOTES |
|---|---|---|---|---|---|---|---|---|---|---|
| | | 19G4E | 1 | | GIRDER | | | | 20948 kg 46128 lbs | |
| 2 | A | | 1 | wa | PL 20x1525 | 24 | 232 | M270M-345WT2 | 9002 kg 19731 lbs | |
| 2 | C | | 1 | wb | PL 20x1525 | 12 | 401 | M270M-345WT2 | 9948 kg 21565 lbs | |
| | | | | | | | | | | |
| 2 | J | | 1 | ta | PL 50x450 | 9 | 780 | | 1727 kg 3809 lbs | |
| 2 | Q | | 1 | tb | PL 30x450 | 25 | 813 | | 2948 kg 6264 lbs | |
| 1 | L | | 1 | ba | PL 50x600 | 9 | 780 | M270M-345WT2 | 2303 kg 5078 lbs | |
| 1 | N | | 1 | bb | PL 35x600 | 25 | 837 | M270M-345WT2 | 4424 kg 9751 lbs | |
| | | | | | | | | | | |
| 3 | T | | 2 | x3b | PL 25x215 | 1 | 525 | MIE M270M-345WT2 | 84 kg 185 lbs | |
| 3 | U | | 10 | x3c | PL 13x215 | 1 | 525 | M270M-345WT2 | 33 kg 74 lbs | |
| | | | | | | | | | | |
| 5 | F | | 1 | x4c | PL 13x500 | 0 | 467 | (BENT) | 34 kg 75 lbs | |
| 5 | G | | 3 | x4h | PL 13x715 | 0 | 467 | (BENT) | 34 kg 75 lbs | |
| 5 | G | | 5 | x4k | PL 13x715 | 0 | 467 | (BENT) | 34 kg 75 lbs | |
| 5 | H | | 1 | x4aa | PL 13x550 | 0 | 479 | (BENT) | 37 kg 82 lbs | |
| | | | | | | | | | | |
| 5 | G | | 1 | x5a | PL 13x715 | 0 | 467 | (BENT) | 34 kg 75 lbs | |
| | | | | | | | | | | |
| 8 | F | | 50 | | 7/8 φ HSB | 0 | 3 1/4 | (RCT) M164M-3 | .27 kg .61 lbs | |
| 8 | J | | 20 | | 7/8 φ HSB | 0 | 4 | (RCT) M164M-3 | .27 kg .61 lbs | |
| 8 | P | | 70 | | 7/8 φ HHN | | | (RCT) M291 (GR-DH31) | .13 kg .30 lbs | |
| 8 | Q | | 70 | | 7/8 φ HSW | | | F436M-3 | .03 kg .07 lbs | |
| | | | | | | | | | | |
| 8 | F | | 5 | | 7/8 φ HSB | 0 | 3 1/4 | (RCT)(GALV) M164M-3 | .27 kg .61 lbs | |
| 8 | P | | 5 | | 7/8 φ HHN | | | (RCT)(GALV) M291 (DH31) | .13 kg .30 lbs | |
| 8 | Q | | 5 | | 7/8 φ HSW | | | (GALV) F436M-3 | .03 kg .07 lbs | |

JOB NO. 521 — DRAWING NO. 19 — REV. 1

Agency of Transportation
X Approved — Rejected
Furnish as Corrected — Revise & Resubmit
Douglas E Bonneau, P.E. — 12/12/12 Date
Structures Project Manager

| REV. | DATE | REMARKS | DWN | CHK | APVL | SHOP |
|---|---|---|---|---|---|---|
| 1 | 12/18 | APPROVAL COMMENTS | EEO | PCP | | |
| 0 | | | | | | |

MATERIAL: M270M-345W UN — SURFACE PREP. & PAINT: SEE GN1 — HOLES: 13/16φ — SHOP BOLTS: AS NOTED

DESCRIPTION: GIRDER DETAIL - 19G4E


CASCO BAY STEEL STRUCTURES, INC.
1 WALLACE AVE. PHONE (207) 780-6722
SOUTH PORTLAND, ME 04106 FAX. (207) 780-6726
TENSOR 3133PC


STRUCTURE: VT 100 OVER LAMOILLE RIVER
MORRISTOWN, VT LAMOILLE COUNTY
STP F 029-1 (2) C/1

| | | | |
|---|---|---|---|
| DRAWN: CRK | DATE: 08/28 | | |
| CHKD: PCP | DATE: 9/17/12 | | |
| LOCATION: MORRISTOWN, VT | JOB NO. 521 | DWG NO. 19 | |
| PROJ NO. STP F 029-1(2)C/1 | | REV. 1 | |
| CUSTOMER: MINTERSET, INC. | | | |