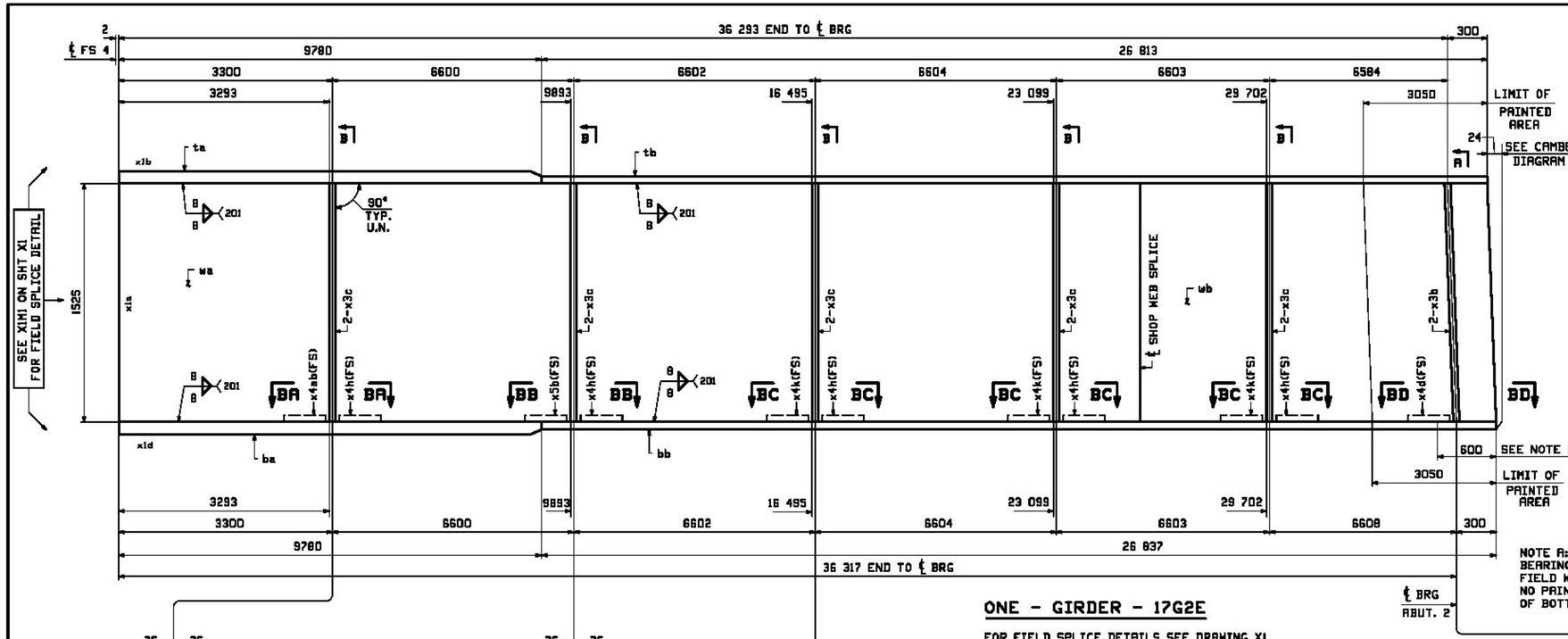

NOTE A:
BEARING AREA TO RECEIVE FIELD WELDED SOLE PLATE. NO PAINT BOTTOM & EDGES OF BOTTOM FLANGE.

ONE - GIRDER - 17G2E

FOR FIELD SPLICE DETAILS SEE DRAWING X1.
FOR GIRDER STANDARD DETAILS SEE DRAWING X3 & X4.
FOR CAMBER & FLANGE DIAGRAMS SEE DRAWING C4.
FOR GENERAL NOTES SEE DRAWING GN1.
T2 DENOTES MATERIAL SUBJECT TO CHARPY V-NOTCH TESTING.

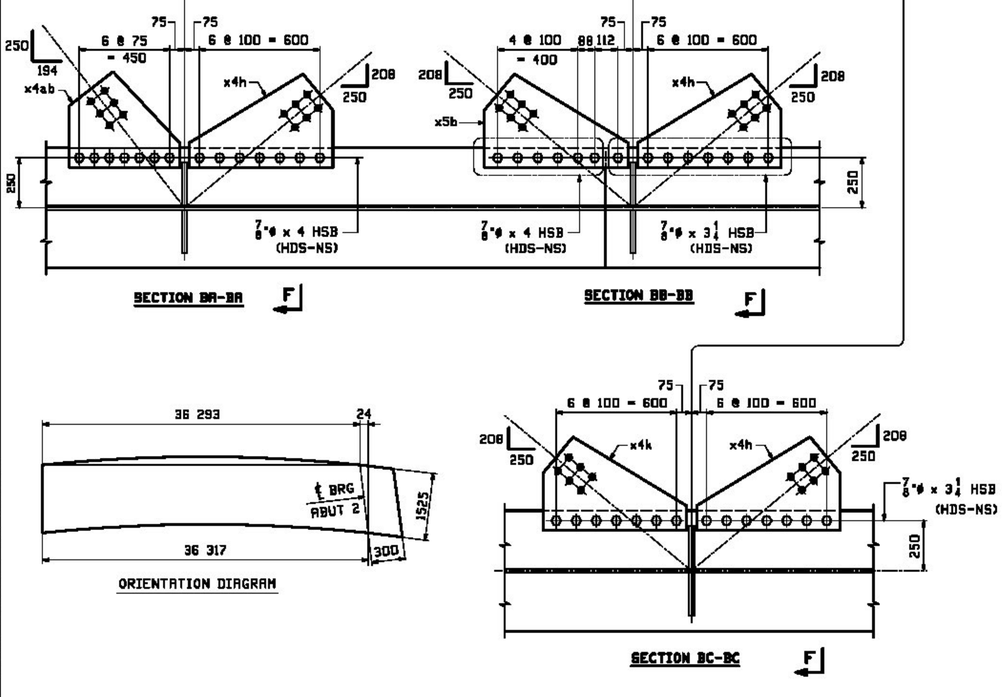

SECTION BA-BA

SECTION BB-BB

ORIENTATION DIAGRAM

SECTION BC-BC

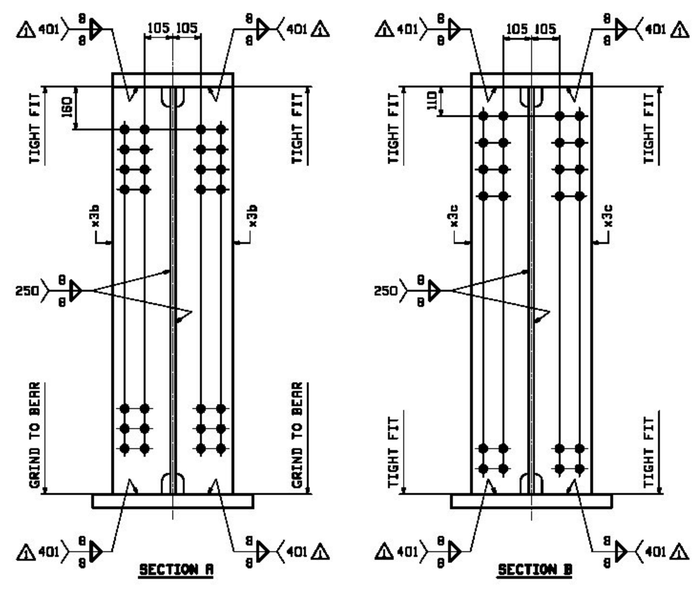

SECTION A

SECTION B

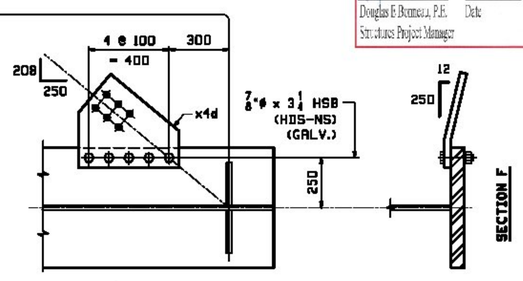

SECTION BD-BD

SECTION F

FORM INFO PAGE	LINE	SHOP MARK	QTY	MARK	MATERIAL	LENGTH m	LENGTH mm	REMARKS	WT	PROCUREMENT NOTES
		17G2E	1		GIRDER				20848 kg 45128 lbs	
2	A		1	wa	PL 20x1525	24	232	M270M-345WT2	9002 kg 19731 lbs	
2	C		1	wb	PL 20x1525	12	401	M270M-345WT2	7988 kg 17565 lbs	
2	J		1	ta	PL 50x450	9	780		1727 kg 3809 lbs	
2	Q		1	tb	PL 30x450	26	813		2948 kg 6264 lbs	
1	L		1	ba	PL 50x600	9	780	M270M-345WT2	2303 kg 5078 lbs	
1	N		1	bb	PL 35x600	26	837	M270M-345WT2	4424 kg 9753 lbs	
3	T		2	x3b	PL 25x215	1	525	MIE M270M-345WT2	84 kg 185 lbs	
3	U		10	x3c	PL 13x215	1	525	M270M-345WT2	33 kg 74 lbs	
5	F		1	x4d	PL 13x500	0	467	(BENT)	34 kg 53 lbs	
5	G		5	x4h	PL 13x715	0	467	(BENT)	34 kg 75 lbs	
5	G		3	x4k	PL 13x715	0	467	(BENT)	34 kg 75 lbs	
5	H		1	x4ab	PL 13x550	0	479	(BENT)	37 kg 58 lbs	
5	G		1	x5b	PL 13x715	0	467	(BENT)	34 kg 75 lbs	
8	F		50		7/8 ø HSB	0	3 1/4	(RCT) M183M-3	.37 kg .81 lbs	
8	J		20		7/8 ø HSB	0	4	(RCT) M183M-3	.37 kg .81 lbs	
8	P		70		7/8 ø HSN			(RCT) M183 (GR-DH31)	.13 kg .30 lbs	
8	Q		70		7/8 ø HSN			F436M-3	.03 kg .07 lbs	
8	F		5		7/8 ø HSB	0	3 1/4	(RCT)(GALV) M183M-3	.37 kg .81 lbs	
8	P		5		7/8 ø HSN			(RCT)(GALV) M183 (GR-DH31)	.13 kg .30 lbs	
8	Q		5		7/8 ø HSN			F436M-3	.03 kg .07 lbs	

MDOT
Agency of Transportation
Approved — Rejected
Furnish as Corrected — Revise & Resubmit
Douglas E. Brunell, P.E. — 10/31/12
Structures Project Manager — Date

REV.	DATE	REMARKS	DWN	CHK	APVL	SHOP
1	12/18	APPROVAL COMMENTS	EEO	PCP		
0						

MATERIAL:	SURFACE PREP. & PAINT:	HOLES:	SHOP BOLTS:
M270M-345W UN	SEE GN1	15/16ø	AS NOTED

DESCRIPTION: GIRDER DETAIL - 17G2E

CASCO BAY STEEL STRUCTURES, INC.
1 WALLACE AVE. SOUTH PORTLAND, ME 04106
PHONE (207) 780-6722 FAX. (207) 780-6726

STRUCTURE: VT 100 OVER LAMOILLE RIVER
MORRISTOWN, VT LAMOILLE COUNTY
STP F 029-1 (2) C/1

DRAWN: CRK	DATE: 08/27
CHKD: PCP	DATE: 9/17/12
JOB NO. 521	DWG NO. 17
REV. 1	

LOCATION: MORRISTOWN, VT
PROJ NO. STP F 029-1(2)C/1
CUSTOMER: WINTERSET, INC.