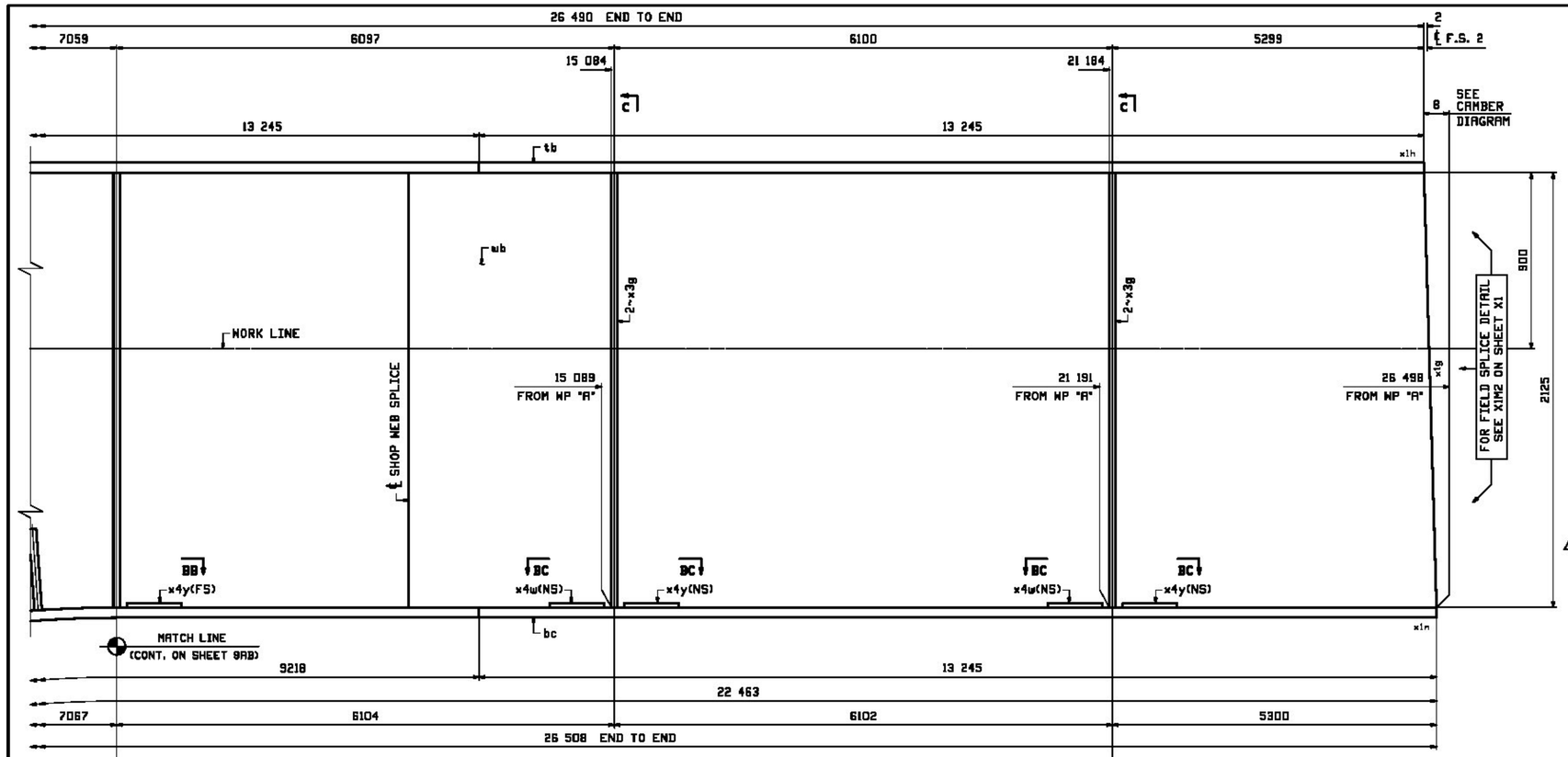

FORM INFO		SHOP	BILL OF MATERIAL					JOB NO. 521	DRAWING NO. 9B	REV. 1
PAGE	LINE	MARK	QTY	MARK	MATERIAL	LENGTH m	LENGTH mm	REMARKS	WT	PROCUREMENT NOTES
		9G4B	1		GIRDER				8933 kg 19,700 lbs	
		9G2D	1		GIRDER				10633 kg 23,440 lbs	
1	G		2	wt	PL 25x4127	12	453	M270M-HPS485W(T2	10098 kg 22,265 lbs	
1	J		2	wb	PL 20x2125	14	058	M270M-HPS485W(T2	4660 kg 10,140 lbs	
1	A		2	tw	PL 50x700	13	245	M270M-HPS485W(T2	3838 kg 8,463 lbs	
1	A		2	tb	PL 50x700	13	245	M270M-HPS485W(T2	3838 kg 8,463 lbs	
1	E		2	bw	PL 50x700	5	399	M270M-HPS485W(T2	1493 kg 3,293 lbs	
1	C		2	bb	PL 50x700	9	218	M270M-HPS485W(T2	2203 kg 4,855 lbs	
1	A		2	bc	PL 50x700	13	245	M270M-HPS485W(T2	3838 kg 8,463 lbs	
3	V		4	x3d	PL 13x240	1	530	M270M-345W(T2	37 kg 83 lbs	
3	W		4	x3f	PL 13x330	2	125	M270M-345W(T2	72 kg 158 lbs	
3	X		8	x3g	PL 13x240	2	125	M270M-345W(T2	53 kg 116 lbs	
3	Y		72	x3k	PL 35x325	0	400	M270M-HPS485W(T2	30 kg 66 lbs	
6	K		2	x4t	PL 13x730	0	420	(BENT)	31 kg 68 lbs	
6	K		4	x4w	PL 13x730	0	424	(BENT)	32 kg 70 lbs	
6	K		6	x4y	PL 13x730	0	424	(BENT)	32 kg 70 lbs	
8	J		84		7/8 ø HSB	0	4	(RCT) M983M-S	27 kg 61 lbs	
8	P		84		7/8 ø HSN			(RCT) M563 (G8-DH3)	24 kg 201 lbs	
8	Q		84		7/8 ø HSW			F436M-S	93 kg 217 lbs	

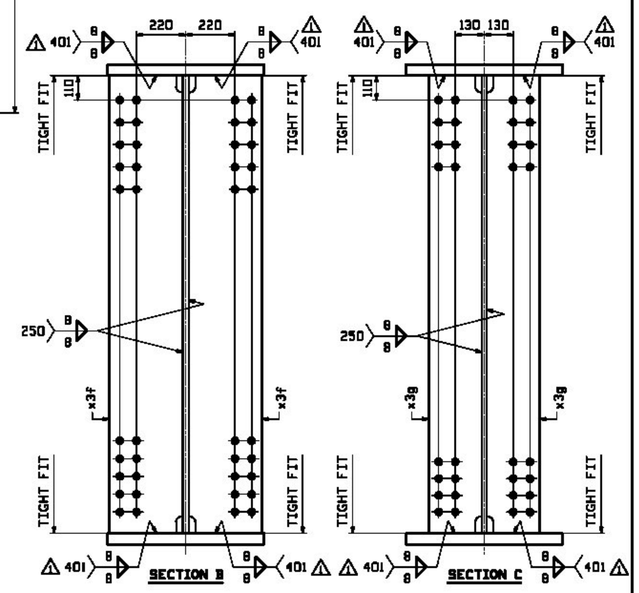

ONE - GIRDER - 9G4B (CONTINUED)
ONE - GIRDER - 9G2D (CONTINUED)

FOR FIELD SPLICE DETAILS SEE DRAWINGS X1 & X2.
FOR GIRDER STANDARD DETAILS SEE DRAWING X3 & X4.
FOR CAMBER & FLANGE DIAGRAMS SEE DRAWING C2.
FOR GENERAL NOTES SEE DRAWING GN1.
T2 DENOTES MATERIAL SUBJECT TO CHARPY V-NOTCH TESTING.

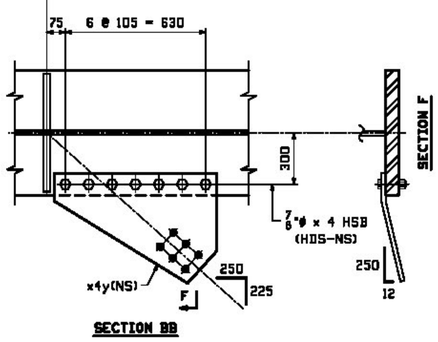

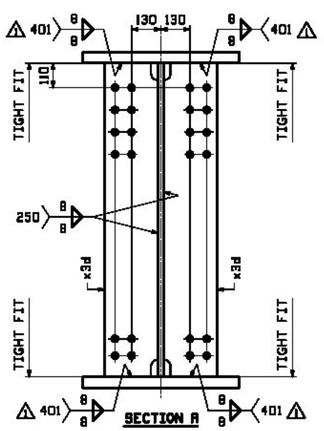

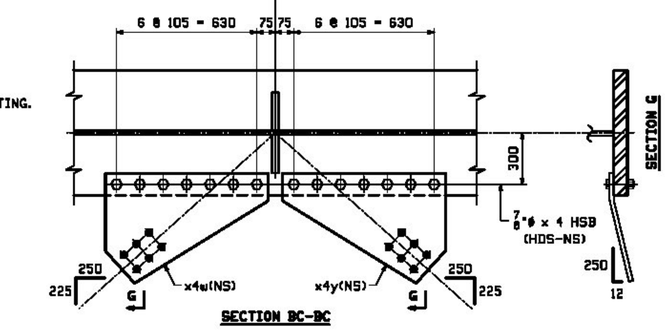

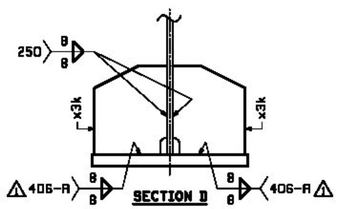

Agency of Transportation
Approved — Rejected
Furnish as Corrected — Revise & Resubmit
Douglas E. Bonneau, P.E. — Date
Structures Project Manager

WORK THIS SHEET WITH SHEET 9AB

REV.	DATE	REMARKS	DWN	CHK	APVL	SHOP
1	12/19	APPROVAL COMMENTS	EEO	PCP		
0						

MATERIAL:	SURFACE PREP. & PAINT:	HOLES:	SHOP BOLTS:
M270M-345W U.N.	SEE GN1	15/16ø	AS NOTED

DESCRIPTION: GIRDER DETAIL - 9G4B & 9G2D

CASCO BAY STEEL STRUCTURES, INC.
1 WALLACE AVE. PHONE (207) 780-6722
SOUTH PORTLAND, ME 04106 FAX. (207) 780-6726

STRUCTURE: VT 100 OVER LAMOILLE RIVER
MORRISTOWN, VT LAMOILLE COUNTY
STP F 029-1 (2) C/1

DRAWN: EEO	DATE: 08/27	
CHKD: PCP	DATE: 09/17	
LOCATION: MORRISTOWN, VT	JOB NO. 521	DWG NO. 9B
PROJ NO. STP F 029-1(2)C/1		REV. 1
CUSTOMER: WINTERSET, INC.		