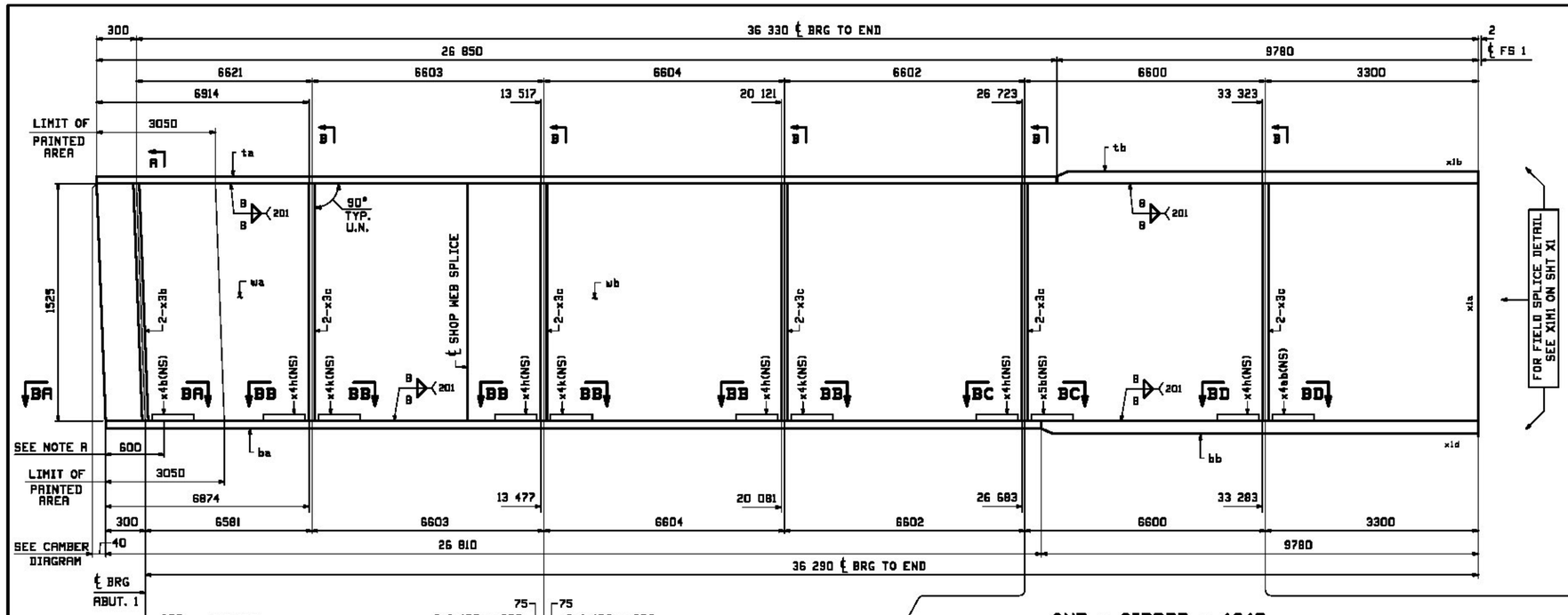

ONE - GIRDER - 4G4A

FOR FIELD SPLICE DETAILS SEE DRAWING X1.
FOR GIRDER STANDARD DETAILS SEE DRAWING X3 & X4.
FOR CAMBER & FLANGE DIAGRAMS SEE DRAWING C1.
FOR GENERAL NOTES SEE DRAWING GN1.
T2 DENOTES MATERIAL SUBJECT TO CHARPY V-NOTCH TESTING.

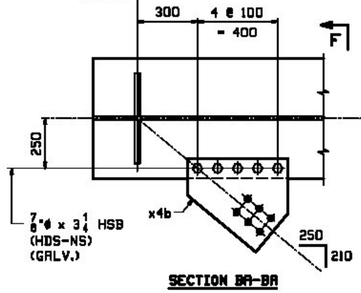

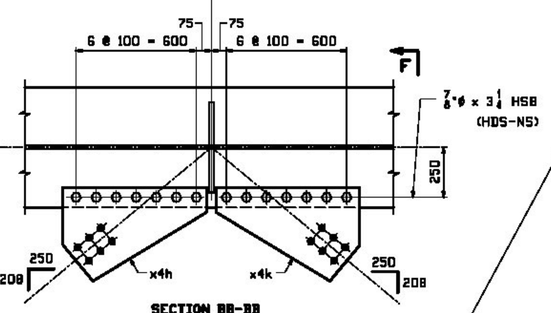

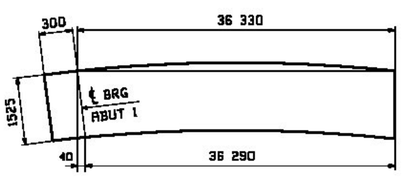

ORIENTATION DIAGRAM

NOTE A:
BEARING AREA TO RECEIVE FIELD WELDED SOLE PLATE. NO PAINT BOTTOM & EDGES OF BOTTOM FLANGE.

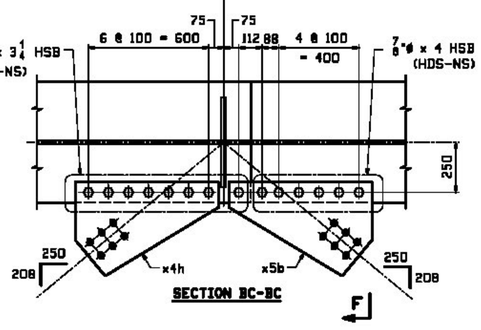

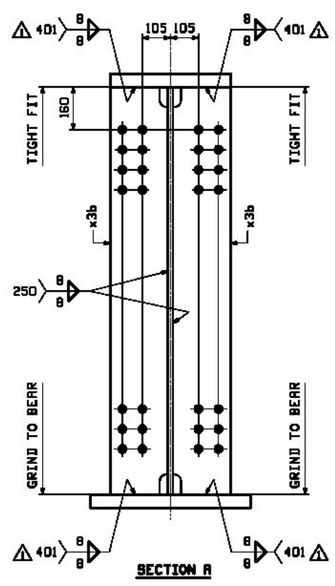

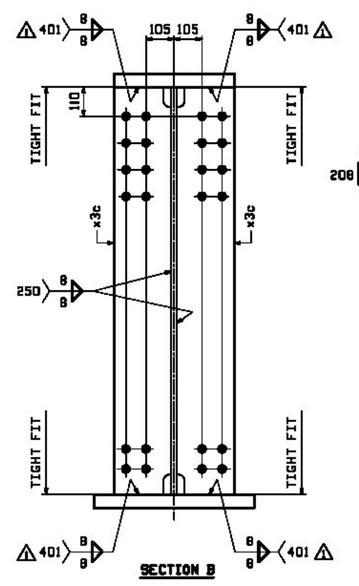

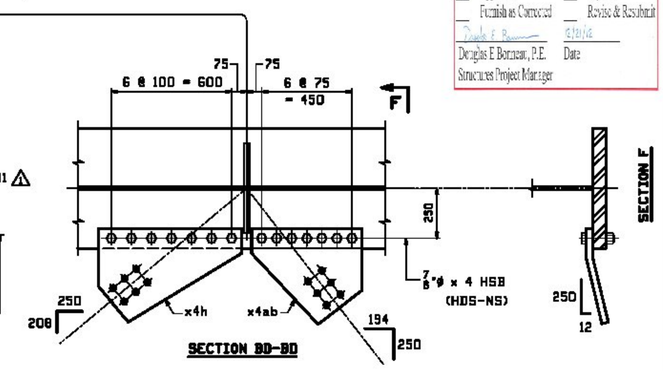

FORM INFO		SHOP	BILL OF MATERIAL					JOB NO. 521	DRAWING NO. 4	REV.
PAGE	LINE	MARK	QTY	MARK	MATERIAL	LENGTH m	LENGTH mm	REMARKS	WT	PROCUREMENT NOTES
		4G4A	1		GIRDER				22767 kg 50193 lbs	
2	C		1	wa	PL 20x1525	12	402	M270M-345WT2	2968 kg 6545 lbs	
2	A		1	wb	PL 20x1525	24	232	M270M-345WT2	5832 kg 12851 lbs	
2	Q		1	ta	PL 30x450	25	850		3943 kg 8691 lbs	
2	J		1	tb	PL 50x450	9	780		1767 kg 3894 lbs	
1	N		1	ba	PL 35x600	26	810	M270M-345WT2	4420 kg 9741 lbs	
1	L		1	bb	PL 50x600	9	780	M270M-345WT2	5303 kg 11689 lbs	
3	T		2	x3b	PL 25x215	1	525	MIE M270M-345WT2	84 kg 185 lbs	
3	U		10	x3c	PL 13x215	1	525	M270M-345WT2	33 kg 74 lbs	
5	F		1	x4b	PL 13x500	0	470	(BENT)	24 kg 53 lbs	
5	G		5	x4h	PL 13x715	0	467	(BENT)	34 kg 75 lbs	
5	G		3	x4k	PL 13x715	0	467	(BENT)	34 kg 75 lbs	
5	H		1	x4ab	PL 13x550	0	479	(BENT)	27 kg 59 lbs	
5	G		1	x5b	PL 13x715	0	467	(BENT)	34 kg 75 lbs	
8	F		50		7/8 ø HSB	0	3 1/4	(RCT) F436M-3	.27 kg .61 lbs	
8	J		20		7/8 ø HSB	0	4	(RCT) F436M-3	.27 kg .61 lbs	
8	P		70		7/8 ø HHN			(RCT) F436M (GR-DH31)	.13 kg .30 lbs	
8	Q		70		7/8 ø HSW			F436M-3	.03 kg .07 lbs	
8	F		5		7/8 ø HSB	0	3 1/4	(RCT)(GALV) F436M-3	.27 kg .61 lbs	
8	P		5		7/8 ø HHN			(RCT)(GALV) F436M (GR-DH31)	.13 kg .30 lbs	
8	Q		5		7/8 ø HSW			(GALV) F436M-3	.03 kg .07 lbs	

VTrans
Agency of Transportation
X Approved — Rejected
— Furnish as Corrected — Revise & Resubmit
Douglas E. Bonneau — 9/19/12
Douglas E. Bonneau, P.E. — Date
Structures Project Manager

REV.	DATE	REMARKS	DWN	CHK	APVL	SHOP
1	12/18	APPROVAL COMMENTS	EEO	PCP		
0						

MATERIAL: M270M-345W UN	SURFACE PREP. & PAINT: SEE GN1	HOLES: 15/16ø	SHOP BOLTS: AS NOTED
DESCRIPTION: GIRDER DETAIL - 4G4A			

CASCO BAY STEEL STRUCTURES, INC.
1 WALLACE AVE. PHONE (207) 780-6722
SOUTH PORTLAND, ME 04106 FAX. (207) 780-6726
TENSOR 3130PC

STRUCTURE:	VT 100 OVER LAMOILLE RIVER MORRISTOWN, VT LAMOILLE COUNTY STP F 029-1 (2) C/1	DRAWN: CRK	DATE: 08/25
		CHKD: PCP	DATE: 9/17/12
LOCATION:	MORRISTOWN, VT	JOB NO.	DWG NO.
PROJ NO.	STP F 029-1(2)C/1	521	4
CUSTOMER:	WINTERSET, INC.		REV. 1