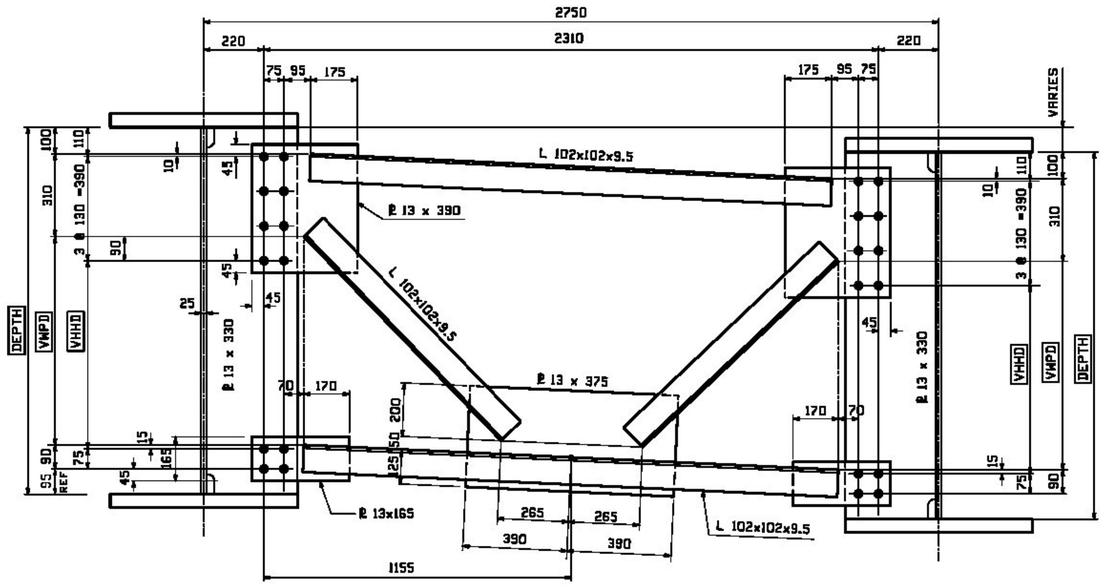

INT DIAPHRAGM TYPE D6

	D6A	D6B	D6C
DEPTH	1598	1374	1150
VWPD	1003	779	555
VHHD	928	704	480

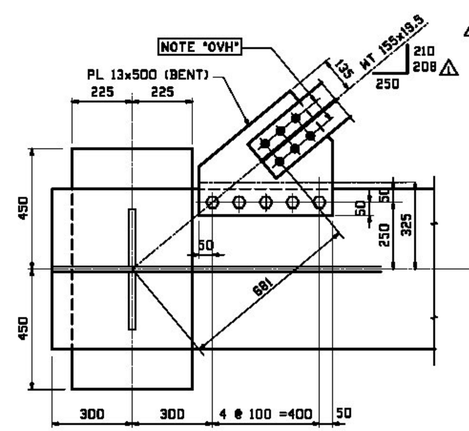

DETAIL L3A

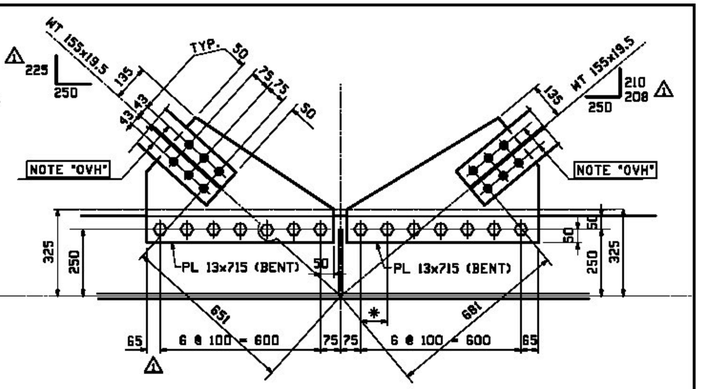

DETAIL L3D

DETAIL L3E

* ADJUST SPACING AS REQ'D TO CLEAR SHOP SPLICE

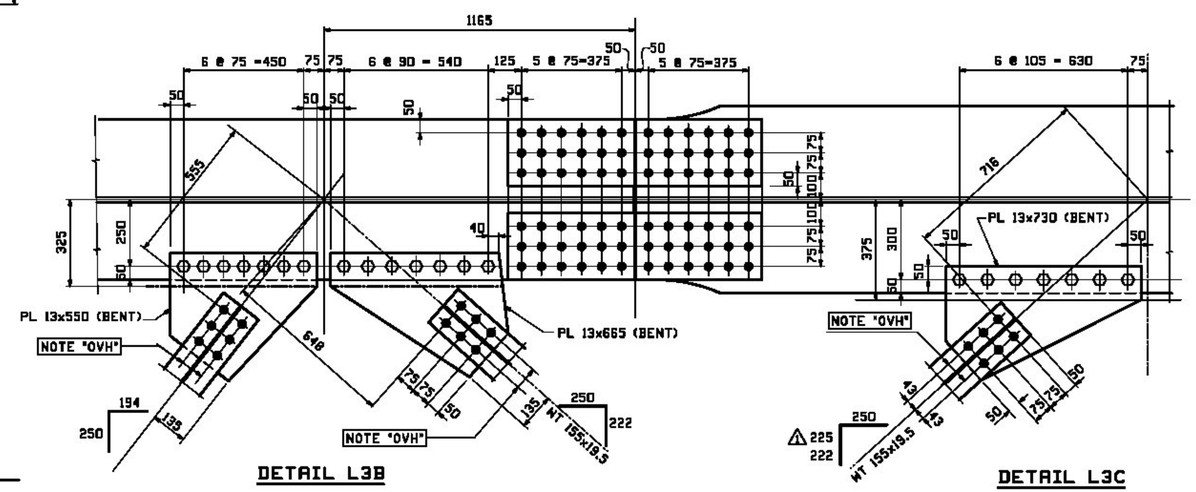

DETAIL L3B

DETAIL L3C

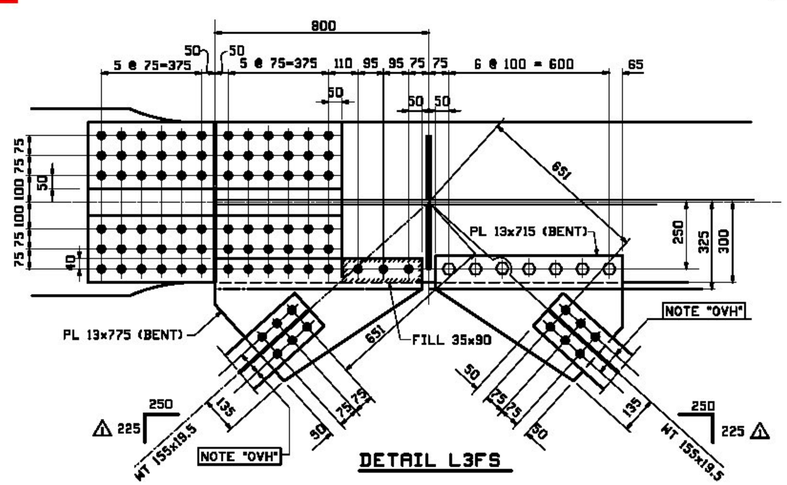

DETAIL L3FS

NOTE "OVH"
$1\frac{1}{16}$ ø HOLES (WT'S ONLY)
FOR $\frac{7}{8}$ ø HSB

NOTE
THE PURPOSE OF THIS DRAWING IS TO COORDINATE GEOMETRIC CONTROL INFORMATION AND CONNECTION SPACING. THIS DWG IS SUBMITTED FOR INFORMATION ONLY & IS NOT INTENDED FOR SHOP FABRICATION. DETAIL DWGS WILL SHOW ALL WELDING AND DIMENSIONS REQ'D FOR FABRICATION.

REV.	DATE	REMARKS	DWN	CHK	APVL	SHOP
1	8/18/12	GENERAL REVISIONS	EEO	PCP		
0						

MATERIAL: M270-GR 345W
SURFACE PREP. & PAINT:
HOLES: $\frac{15}{16}$ DIA (UN)
BOLTS: $\frac{7}{8}$ A325-TYPE 3

DESCRIPTION: TYPICAL LAYOUTS

CASCO BAY STEEL STRUCTURES, INC.
1 WALLACE AVE. PHONE (207) 780-6722
SOUTH PORTLAND, ME 04106 FAX. (207) 780-6726

TENSOR 3D/PC

STRUCTURE: VT 100 OVER LAMOILLE RIVER
MORRISTOWN, VT LAMOILLE COUNTY
STP F 029-1 (2) C/1

DRAWN:	WJG	DATE:	07/29
CHKD:	SOB	DATE:	08/07
LOCATION:	MORRISTOWN, VT	JOB NO.	DWG NO.
PROJ NO.	STP F 029-1(2)C/1	521	TD3
CUSTOMER:	MINTERSET, INC.		REV. 1

X Reviewed ____ Furnish As Corrected
____ Rejected ____ Revise and Resubmit

This review is only for general conformance with the design concept and the information given in the Construction Documents. Corrections or comments made on the shop drawings during the review do not relieve the Contractor from compliance with the requirements of the Plans and Specifications. Review of a specific item shall not include review of an assembly of which an item is a component. The Contractor is responsible for dimensions to be confirmed and corrected at the job site; information that pertains solely to the fabrication process or to the means, methods, techniques, sequences and procedures of construction; coordination of the Work with that of other trades and performing all Work in a safe and satisfactory manner.

Date October 24, 2012
By D. Kull

McFarland Johnson

VERMONT Agency of Transportation
X Approved ____ Rejected
____ Furnish as Corrected ____ Revise & Resubmit
Douglas E. Bonneau 12/10/12
Douglas E Bonneau, P.E. Date
Structures Project Manager