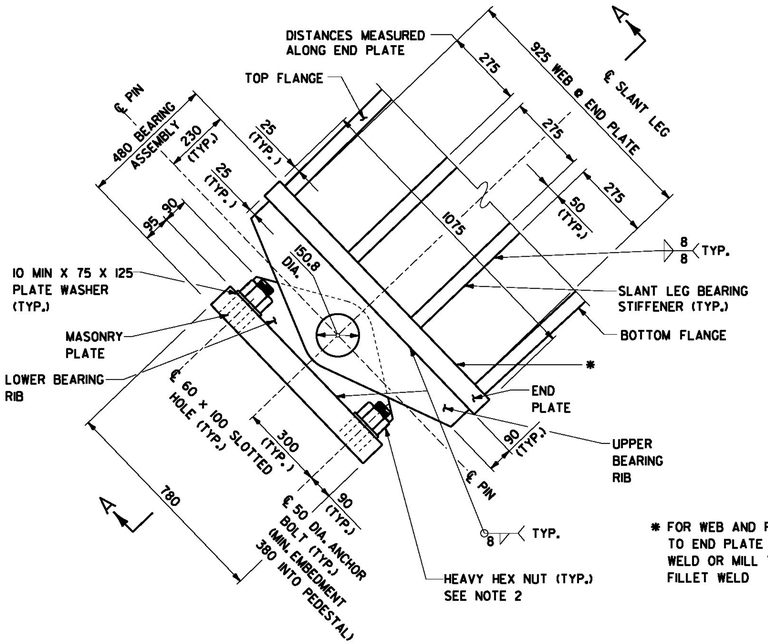


ELEVATION

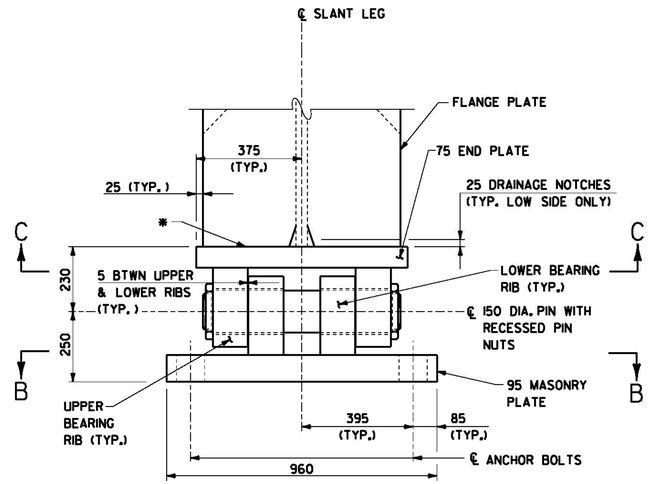


* FOR WEB AND FLANGE CONNECTION TO END PLATE USE FULL PENETRATION WELD OR MILL TO BEAR WITH 8 FILLET WELD

SECTION A-A

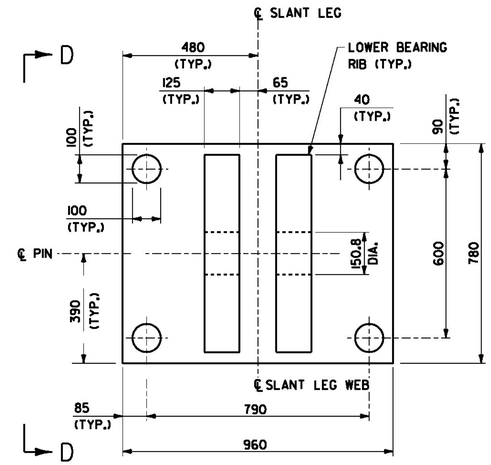


SECTION B-B
LOWER BEARING ASSEMBLY

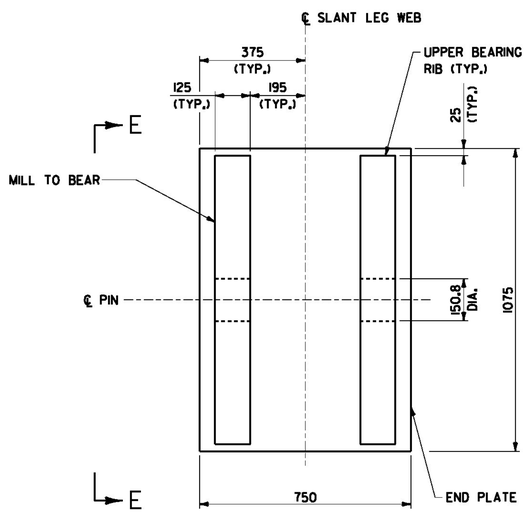


SECTION C-C
UPPER BEARING ASSEMBLY
SECTION C-C SHOWN FROM UNDERSIDE OF BEARING

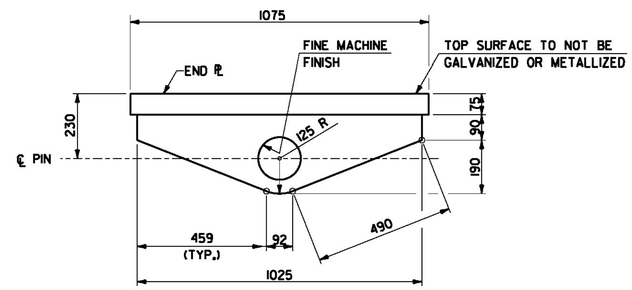


VIEW E-E
UPPER BEARING ASSEMBLY

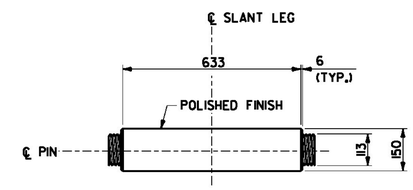


PIN DETAIL

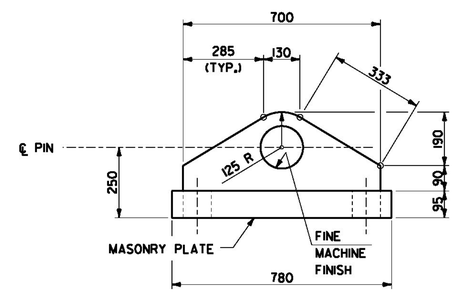


VIEW D-D
LOWER BEARING ASSEMBLY

## DESIGN LOADS

| DESCRIPTION | LOAD |
|---|---|
| DEAD LOAD 1 (STEEL FRAMES, DECK) | 2905 KN |
| DEAD LOAD 2 (CONCRETE CURB, RAIL) | 650 KN |
| TEMPERATURE | 80 KN |
| LIVE LOAD (+ IMPACT) | 1380 KN |
| TOTAL | 5015 KN |

## BEARING NOTES

1. FOR ADDITIONAL STEEL BEARING NOTES, SEE SHEET 4.
2. DRAW NUTS FINGER TIGHT DURING CONSTRUCTION. AFTER PLACEMENT OF CONCRETE, RE-ADJUST NUTS AND BURR THREADS ABOVE NUT.

# SLANT LEG BEARING DETAILS
# ITEM 531.13 BEARING DEVICE ASSEMBLY, STEEL

SCALE: 1:10

0 0.5 1
SCALE = 1:10

NOTE: ALL DIMENSIONS IN MILLIMETERS (mm) EXCEPT WHERE NOTED.

PROJECT NAME: MORRISTOWN
PROJECT NUMBER: STP F 029-1(2)C/1

FILE NAME: z10b194ab2.dgn
PROJECT LEADER: DMB
DESIGNED BY: D. Kull
SLANT LEG BEARING DETAILS
PLOT DATE: 30-MAR-2012
DRAWN BY: P. Dustin
CHECKED BY: R. Joy
SHEET 82 OF 123

McFarland Johnson