Metric

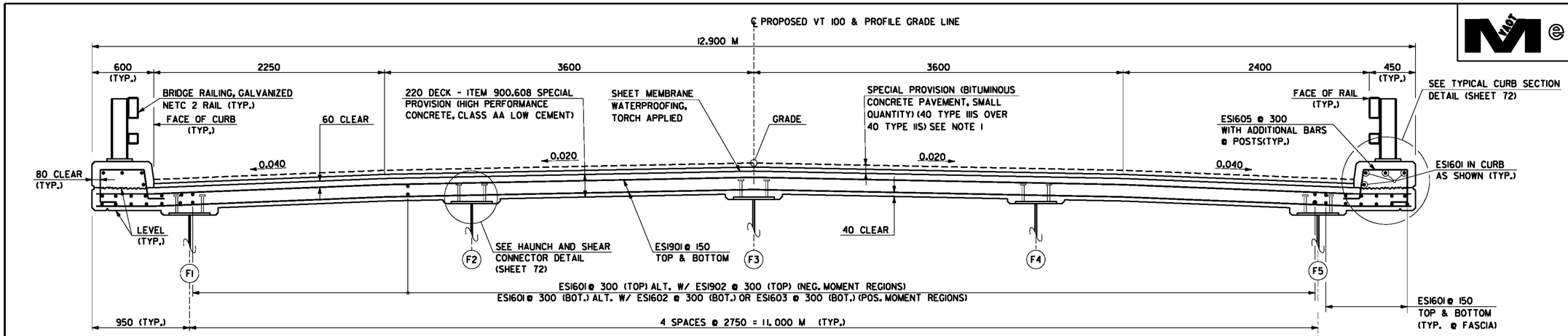

TYPICAL BRIDGE SECTION

SCALE: 1:20

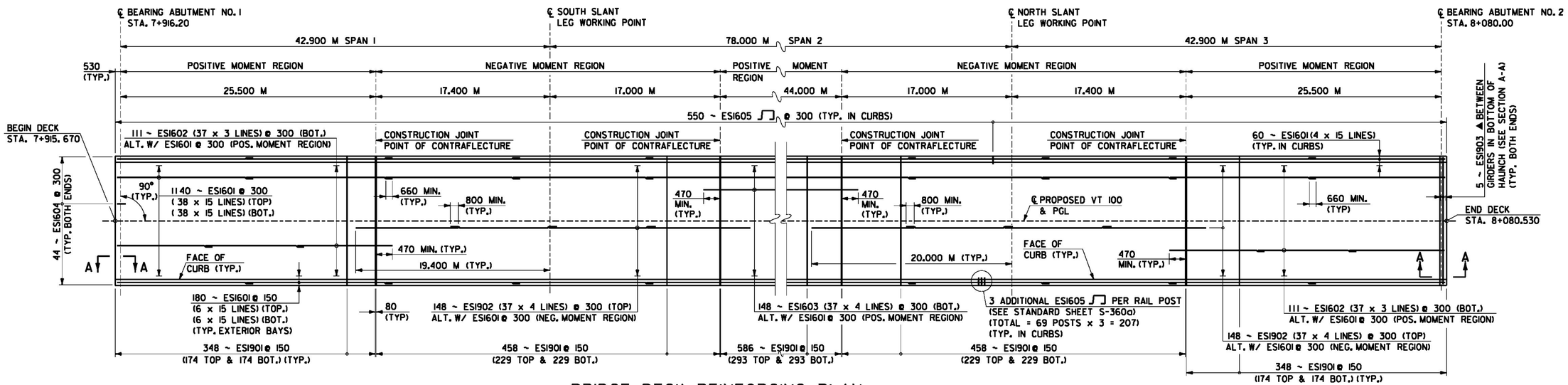

BRIDGE DECK REINFORCING PLAN

SCALE: 1:200

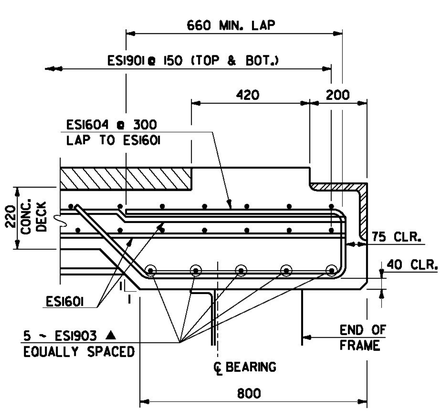

SECTION A-A

SCALE: 1:10

(ABUTMENT NO. 2 SHOWN, ABUTMENT NO. 1 SIMILAR)

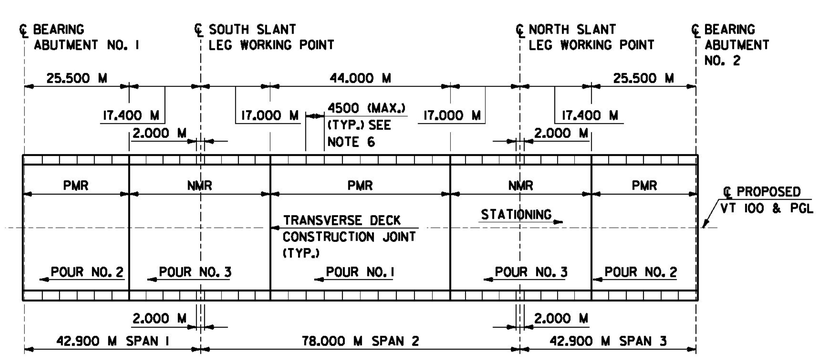

DECK POUR SEQUENCE

NOT TO SCALE

DECK POUR SEQUENCE NOTES

1. THERE SHALL BE A MINIMUM DELAY PERIOD OF 96 HOURS AFTER COMPLETION OF EACH POUR BEFORE BEGINNING ANOTHER POUR.
2. IF APPROVED BY THE ENGINEER, INDIVIDUAL POUR NUMBERS AS SHOWN MAY BE POURED THE SAME DAY PROVIDED THE MAXIMUM TIME OF POUR IS 8 HOURS AND INDICATED POURING SEQUENCE IS FOLLOWED AND A RETARDING ADMIXTURE IS USED SO THAT THE DECK CONCRETE WILL NOT SET UP UNTIL ALL THE POUR HAS BEEN MADE.
3. THE RETARDING ADMIXTURE SHALL BE INCIDENTAL TO ITEM 900.608, SPECIAL PROVISION (HIGH PERFORMANCE CONCRETE, CLASS AA LOW CEMENT).
4. ALL POURS SHALL START FROM THE LOW END (ELEVATION WISE).
5. IF ALL SECTIONS ARE NOT POURED IN THE SAME DAY, USE TRANSVERSE BRIDGE SLAB CONSTRUCTION JOINTS. (SEE DETAIL, SHEET 72). BRIDGE DECK CONCRETE SHALL BE DEPOSITED PARALLEL TO THE CENTERLINE BEARING.
6. CAST CURB IN POSITIVE MOMENT REGIONS, THEN NEGATIVE MOMENT REGIONS. THE CURB POURING SEQUENCE WILL BE IN ALTERNATING SECTIONS.

NOTE

1. SECOND LIFT OF BITUMINOUS CONCRETE PAVEMENT TYPE IIIS IS NOT INCLUDED IN THIS CONTRACT.

LEGEND

▲ = CUT TO FIT IN FIELD
PMR = POSITIVE MOMENT REGION
NMR = NEGATIVE MOMENT REGION

NOTE: ALL DIMENSIONS IN MILLIMETERS (mm) EXCEPT WHERE NOTED.

0 0.5 1
SCALE = 1:10

0 1 2
SCALE = 1:20

McFarland Johnson

PROJECT NAME: MORRISTOWN	
PROJECT NUMBER: STP F 029-1(2)C/1	
FILE NAME: z10b194adl.dgn	PLOT DATE: 11-APR-2012
PROJECT LEADER: DMB	DRAWN BY: S. Merkwan
DESIGNED BY: S. Della	CHECKED BY: R. Joy
DECK REINFORCEMENT	SHEET 71 OF 123