SmartSensor Mount

The SmartSensor™ mount makes installation quick and easy by helping you securely mount any of the Wavetronix SmartSensors. Sturdily built of powder-coated aluminum for durability and weather-resistance, this mount can withstand whatever the elements throw at it.

Features
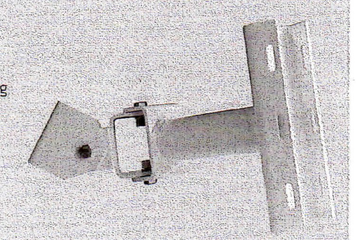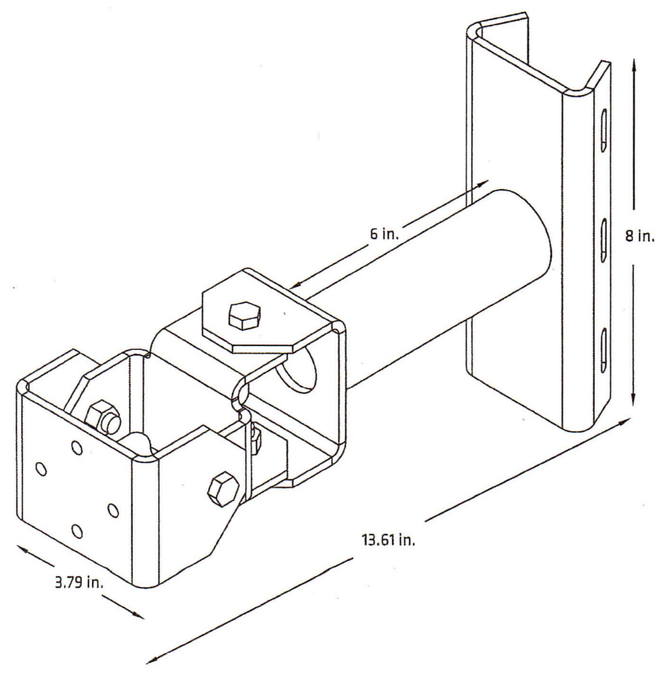
- Two axes of rotation for horizontal and vertical positioning
- Mates with fixed and rotational back-plates on the SmartSensor V, SmartSensor HD, SmartSensor Advance, and SmartSensor Matrix
- Symmetric hole pattern for flexibility in sensor attachment
- Two contact points for attachment to circular or non-circular poles
- On circular poles, another axis of rotation around the pole is available
- Accepts ¾" banding
- Supports a 15-lb. (6.8-kg) load
- Heavy duty aluminum construction makes mount sturdy and long-lasting
- Powder coated for oxidization resistance, allowing mount to withstand the harshest weather conditions