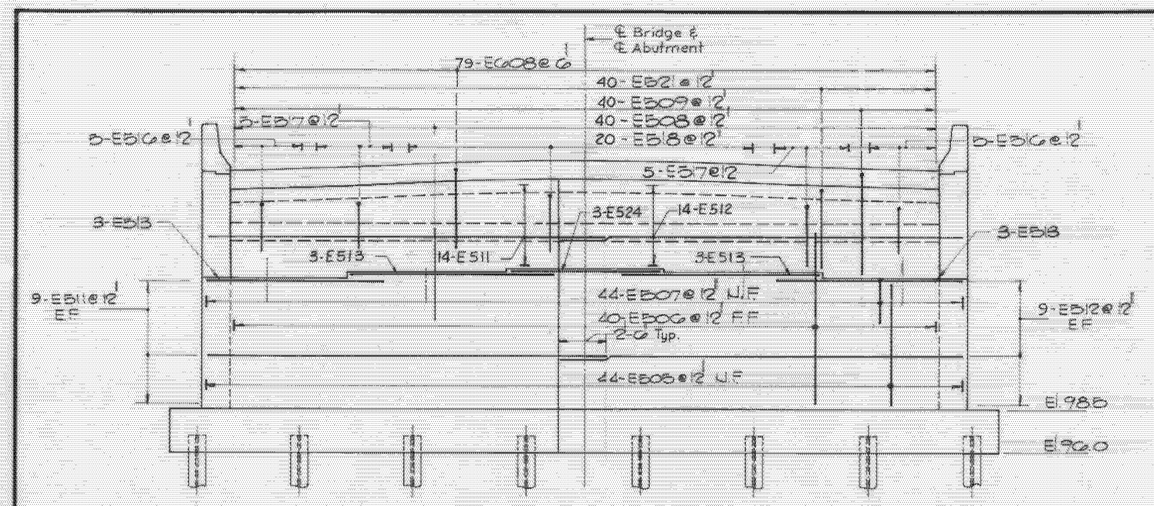

ELEVATION - EAST ABUTMENT
Scale: 1/4" = 1'-0"

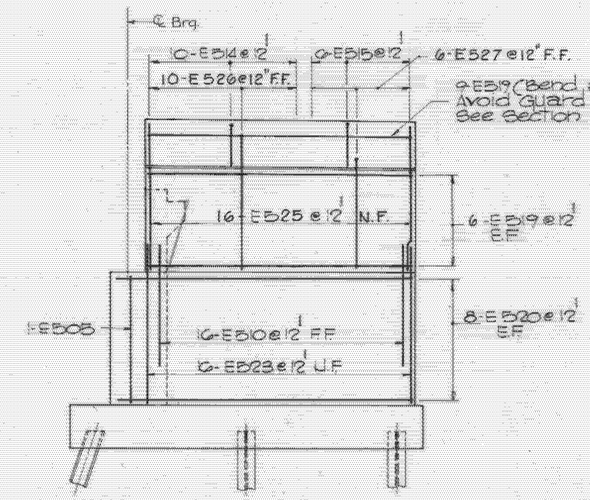

ELEVATION - N.E. & S.E. WINGWALL
Scale: 1/4" = 1'-0"

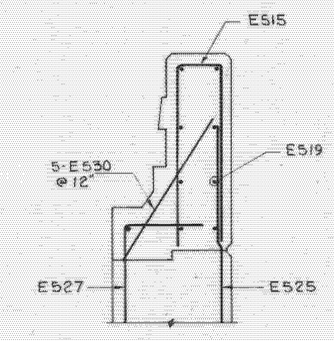

SECTION C-C
Scale: 1" = 1'-0"

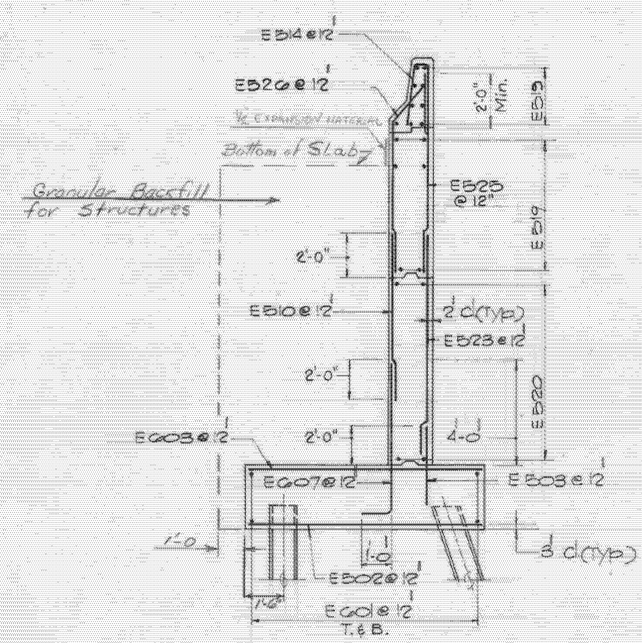

SECTION A-A
3/8" = 1'-0"

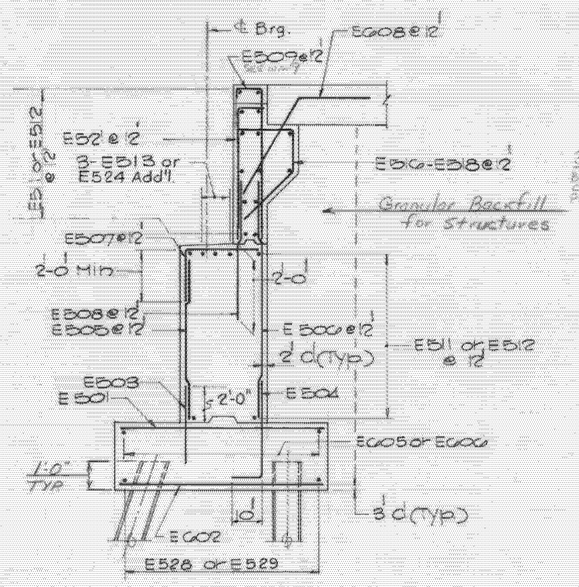

SECTION B-B
3/8" = 1'-0"

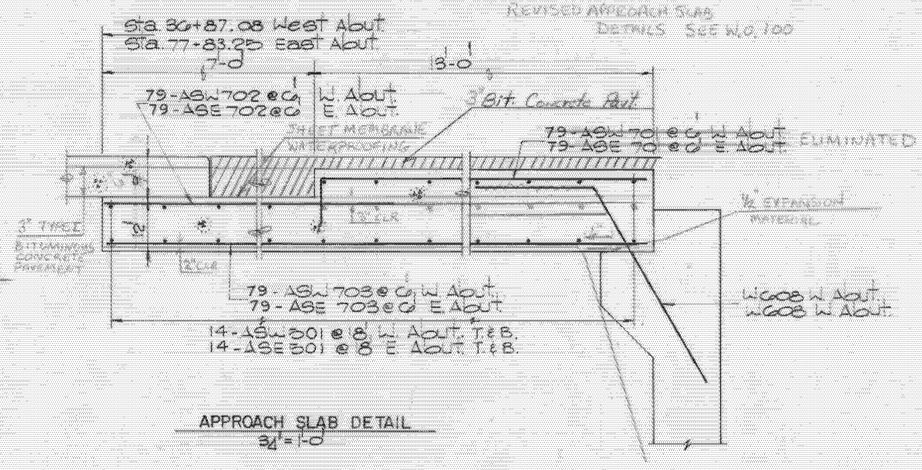

APPROACH SLAB DETAIL
3/4" = 1'-0"

ALBURGH-ROUSES POINT
BHF MEMB(24)
SHEET 24 OF 50
FOR REFERENCE ONLY

STATE OF VERMONT
AGENCY OF TRANSPORTATION

TOWN OF ROUSES POINT N.Y. — ALBURG VT.	Bridge No. 1
HIGHWAY NO. ROUTE 2	Log Sta. 0+00
	Surv. Sta.

EAST ABUTMENT, REINFORCING STEEL
(STEEL ALTERNATE)

Designed by K.A.C.	Drawn by A.B.M.
Checked by J.S.J. date 10-26-84	Bridge Design Supervisor C.J.M./S.M. date 10-26-84
PROJECT ROUSES POINT BRIDGE REPLACEMENT	PROJECT NO. BRF 028-1(11)
Bridge Sheet No. S554	Sheet of

HNTB
HOWARD NEEDLES TAMMEN & BERGENDOFF

BR-6