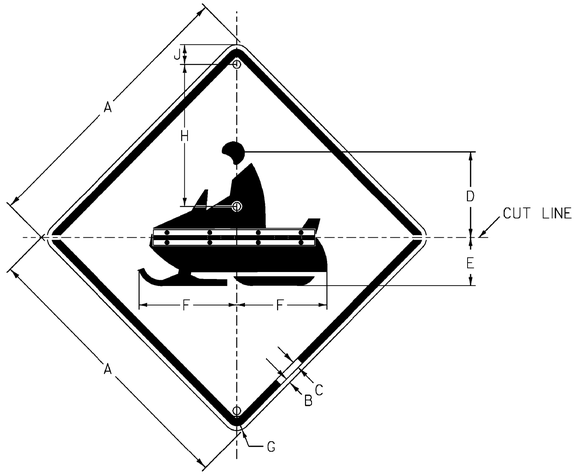

W11-6H

SIGN	DIMENSIONS (INCHES)								
	A	B	C	D	E	F	G	H	J
STD.	30	1/2	3/4	11 7/16	5 9/16	12 11/16	1 7/8	14	2 1/2
SPECIAL	36	5/8	7/8	14 1/8	6 3/4	15 1/4	2 1/4	19	2 1/2

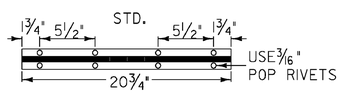

USE STANDARD 2" (BLACK) PIANO HINGE

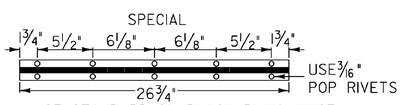

USE STANDARD 2" (BLACK) PIANO HINGE

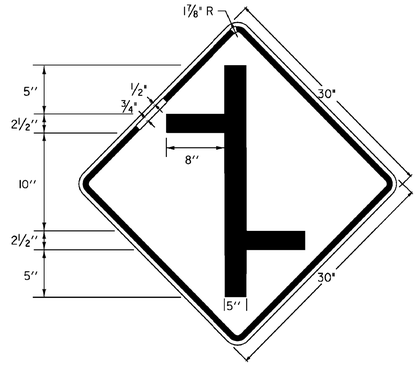

W2-1Md

NOTE: OPTICALLY CENTER

THIS SIGN WAS REPLACED BY 3 SIGNS: W16-18P
R2-1
R2-5P

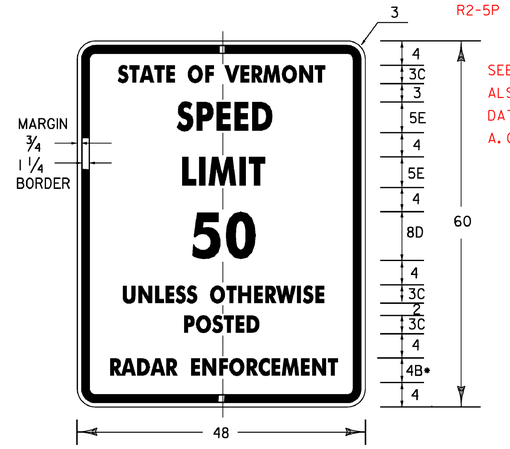

SEE SHEET #172
ALSO REFER TO E-MAIL, DATED 04/04/2011, FROM A. GAMBLE TRAFFIC OPS.

• REDUCE SPACING 25%

VR-114

BLACK TEXT AND BORDER
WHITE RETRORFLECTIVE BACKGROUND

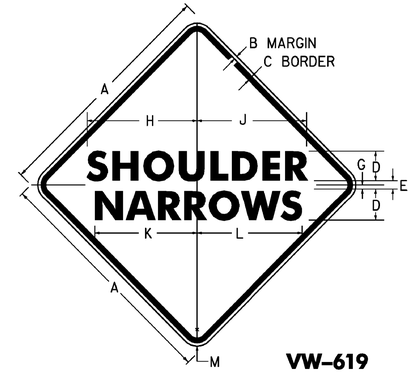

VW-619

SIGN	DIMENSIONS (INCHES)												
	A	B	C	D	E	F	G	H	J	K	L	M
MIN & STD.	36	5/8	7/8	5C	3	6D	1	13 11/16	13 1/16	17 5/8	18 1/4	2 1/4
EXPWY.	48	3/4	1 1/4	7D	3 1/2	7D	1	23 13/16	23 7/8	21 1/2	21 9/16	3

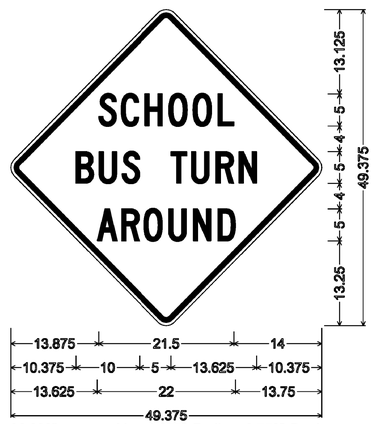

36.000" across sides 1.875" Radius, 0.750" Border, 0.500" Indent, Black on Bright yellow green; "SCHOOL" C; "BUS TURN" C; "AROUND" C

VS3-4

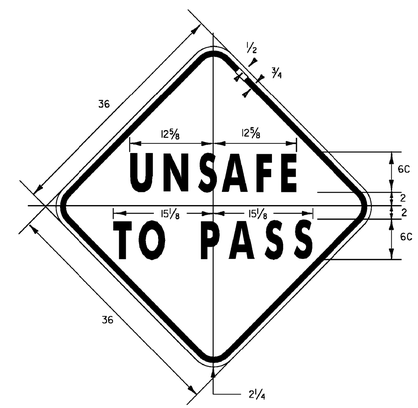

VW-092

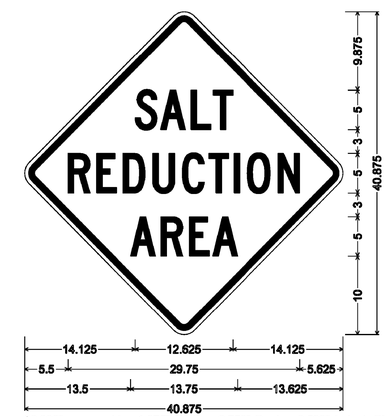

30.000" across sides 1.875" Radius, 0.750" Border, 0.500" Indent, Black on Yellow; "SALT" C 2K; "REDUCTION" C 2K; "AREA" C 2K;

VW-290

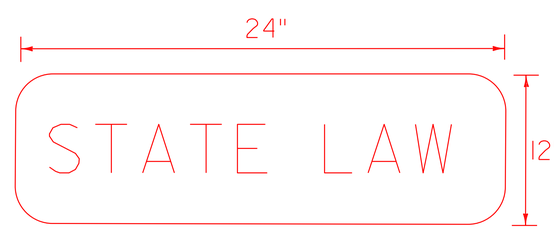

FLUORESCENT YELLOW
BACKGROUND
W/BLACK LETTERS

W16-18P

ALL DIMENSIONS SHOWN IN INCHES EXCEPT WHERE NOTED.

PROJECT NAME: STATEWIDE - SOUTHEAST REGION

PROJECT NUMBER: STPG SIGN (31)

FILE NAME: 10B010.SD_2
PROJECT LEADER: A. GAMBLE
DESIGNED BY: M. MILLER
SIGN DETAILS 2

PLOT DATE: 07-OCT-2010
DRAWN BY: M. MILLER
CHECKED BY: A. GAMBLE
SHEET 5 OF 175