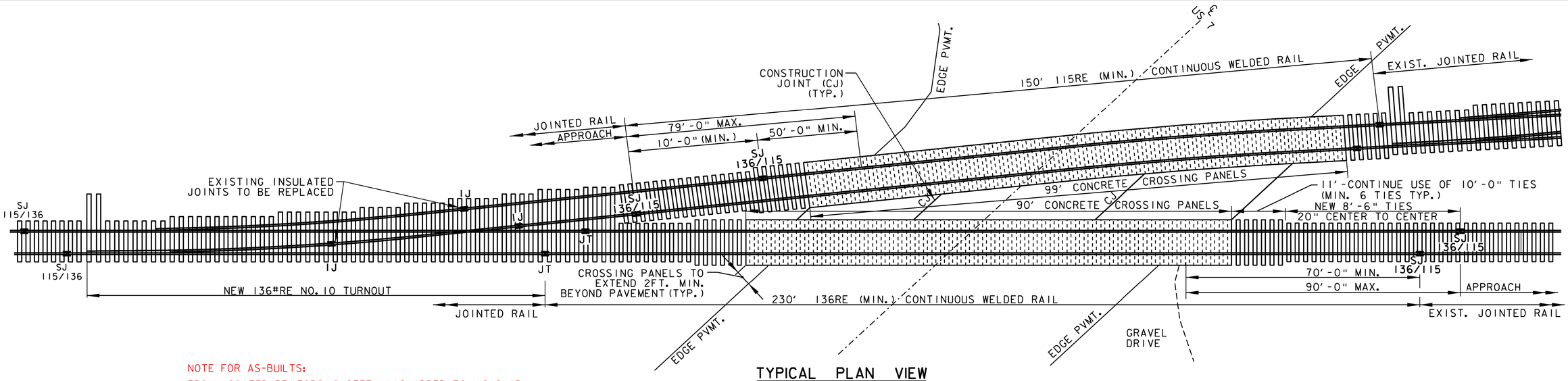

TYPICAL PLAN VIEW

N.T.S.

NOTE FOR AS-BUILTS:
EPOXY COATED REINFORCING STEEL WAS ADDED TO HIS SLAB. #5 BARS WERE ADDED. 12" ON CENTER EAST TO WEST, 18" ON CENTER NORTH TO SOUTH. ONE MAT, 2" CLEARANCE ON THE BOTTOM OF THE SLAB.

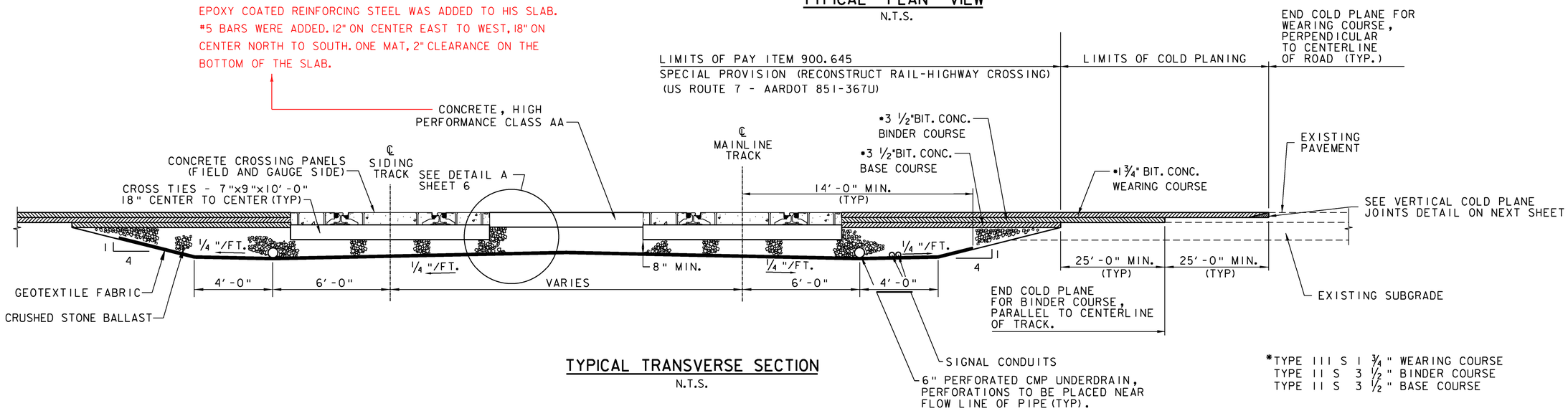

TYPICAL TRANSVERSE SECTION

N.T.S.

*TYPE III S 1 3/4" WEARING COURSE
TYPE II S 3 1/2" BINDER COURSE
TYPE II S 3 1/2" BASE COURSE

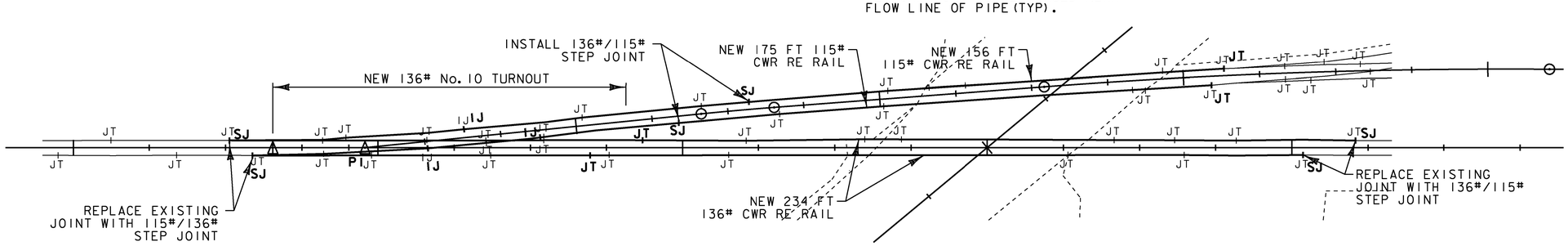

EXISTING AND PROPOSED RAIL JOINT LAYOUT

N.T.S.

LEGEND
IJ - INSULATED JOINT
JT - STANDARD JOINT
SJ - STEP JOINT

PROJECT NAME: NEW HAVEN	
PROJECT NUMBER: RAIL 5307(16)	
FILE NAME: z09g070/RAIL/detail3.dgn	PLOT DATE: 03-AUG-2010
PROJECT LEADER: J.B.McCARTHY	DRAWN BY: LB
DESIGNED BY: LB	CHECKED BY: J.READ
TYPICAL SECTIONS AND DETAILS #1	SHEET 5 OF 18