Vermont Agency of Transportation
RECEIVED
Walden Next Beams Rev1_Approved 4.15.15.pdf

CK'D BY CLB OK'D BY HIS

April 13, 2015

RESUBMIT NO Approved AsNoted

BY C. CARLSON DATE 04/15/15

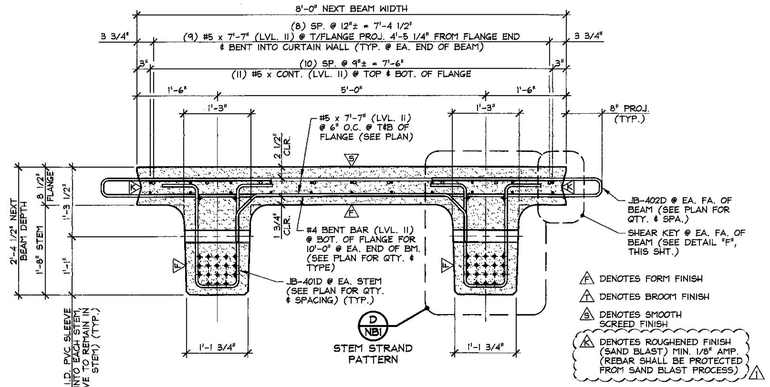

A NB1 DIMENSIONAL & REINFORCING SECTION
3/4" = 1'-0"

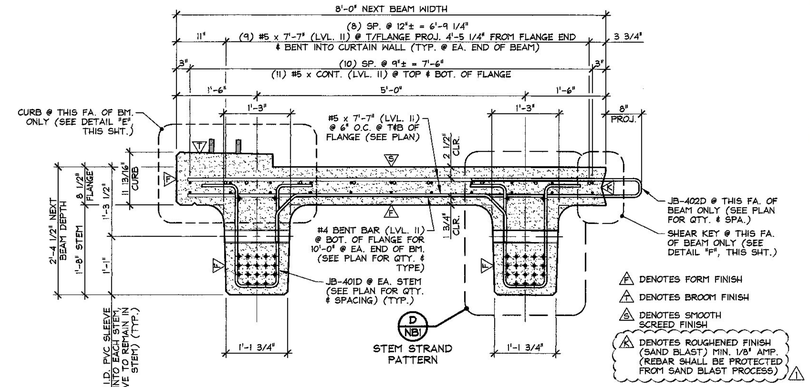

B NB1 DIMENSIONAL & REINFORCING SECTION
3/4" = 1'-0"

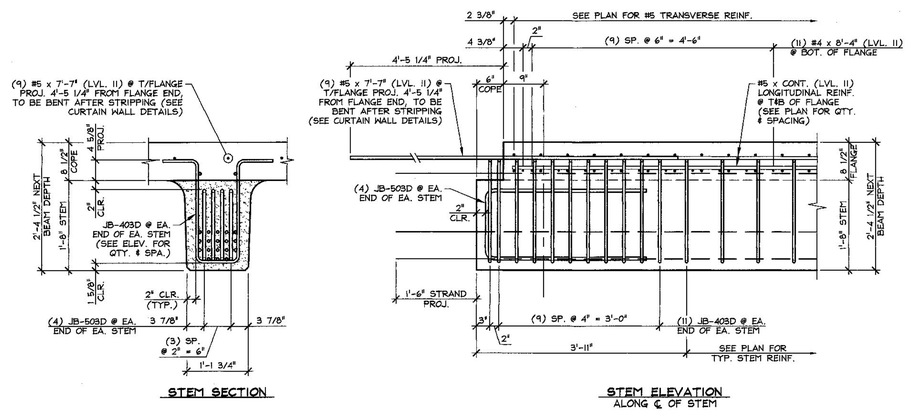

C NB1 END BLOCK STEM REINFORCING DETAILS
3/4" = 1'-0"

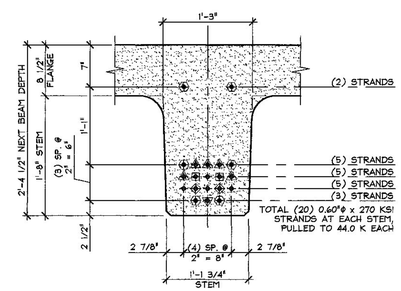

D NB1 STEM STRAND PATTERN
1" = 1'-0"

PRESTRESSING NOTATIONS

- DENOTES STRAIGHT STRANDS TO BE CUT FLUSH WITH EA. END OF EA. STEM
- DENOTES STRAIGHT STRANDS TO BE DEBONDED 6" FROM EA. END OF EA. STEM
- DENOTES STRAIGHT STRANDS TO BE DEBONDED 4'-0" FROM EA. END OF EA. STEM
- DENOTES STRAIGHT STRANDS TO BE DEBONDED 8'-0" FROM EA. END OF EA. STEM
- DENOTES STRAIGHT STRANDS TO BE DEBONDED 12'-0" FROM EA. END OF EA. STEM
- DENOTES STRAIGHT STRANDS TO BE PROJECT 1'-6" FROM EA. END OF EA. STEM

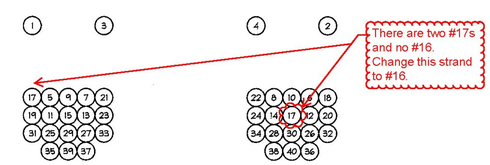

DETENSIONING SCHEDULE
N.T.S.

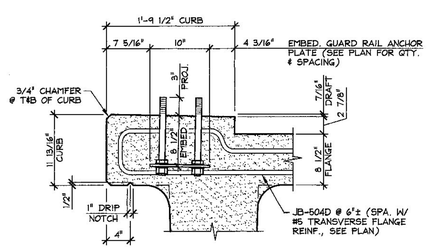

E NB1 CURB & GUARD RAIL ANCHOR PLATE DETAIL
1" = 1'-0"

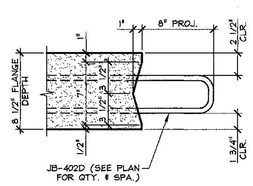

F NB1 SHEAR KEY DETAIL
1 1/2" = 1'-0"

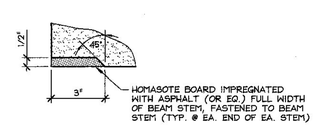

G NB1 HOMASOTE DETAIL
3" = 1'-0"

△1 4-13-15 REVISED PER V.A.T. COMMENTS

APPROVAL STAMP:

J.P. CARRARA & SONS INC.
Precast & Prestress Manufacturer
2464 CASE STR., MIDDLEBURY, VERMONT 05753 Phone:(802)388-6361 Fax:(802)388-9010

J.A. McDONALD, INC.
CONTRACTOR
LYNDON CENTER, VERMONT

STATE OF VERMONT AGENCY OF TRANSPORTATION
COUNTY OF CALEDONIA

DATE: FEB. 26, 2015
SCALE: NOTED

TOWN OF WALDEN
VT ROUTE NO. 15 (MINOR ARTERIAL) OVER JOE'S BROOK
BRIDGE NO.: 83 PROJECT NO.: BRF 030-3(5)

CHKD: P.C. DFTM: B.L.
JOB NO: 23460-015

PRESTRESSED NEXT BEAM DETAILS

DWG. NO: NB1

F:\VT-Bridges\23460-15 Walden\23460-NB1.dwg, 4/13/2015 11:51:41 AM