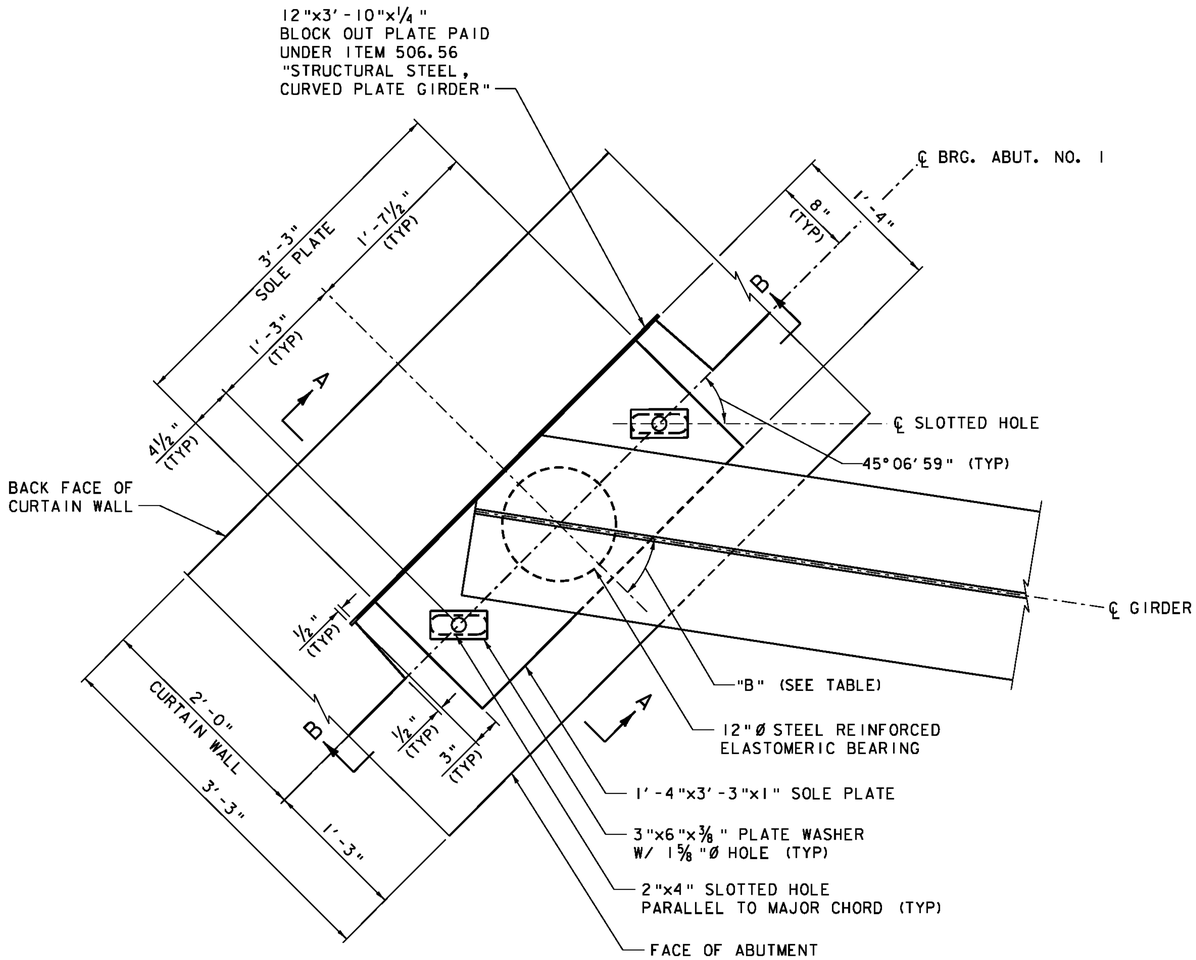

ABUTMENT NO. 1 EXPANSION BEARING PLAN

SCALE 1 1/2" = 1'-0"

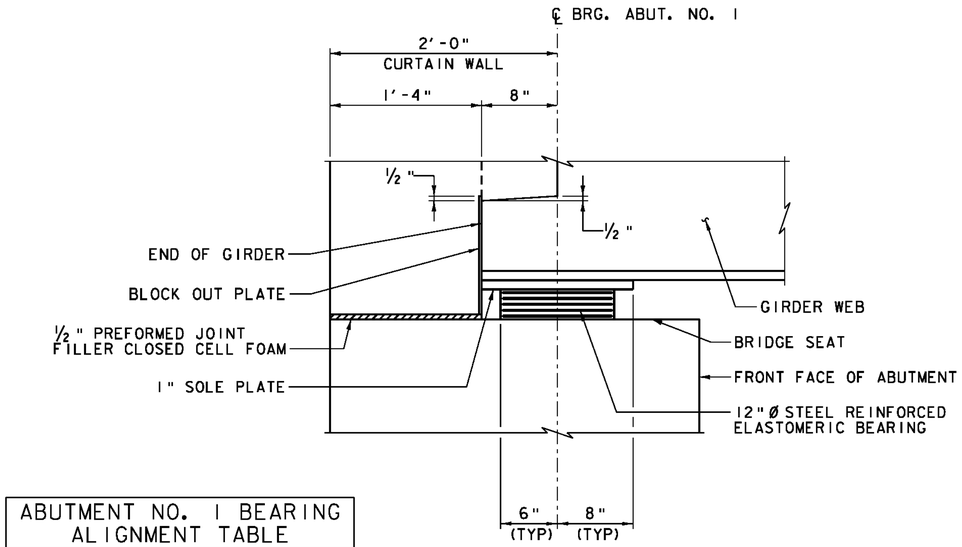

SECTION A-A

SCALE 1 1/2" = 1'-0"

ABUTMENT NO. 1 BEARING ALIGNMENT TABLE	
GIRDER NO.	ANGLE "B"
1	36°41'41"
2	36°20'43"
3	36°00'11"
4	35°40'04"
5	35°20'21"

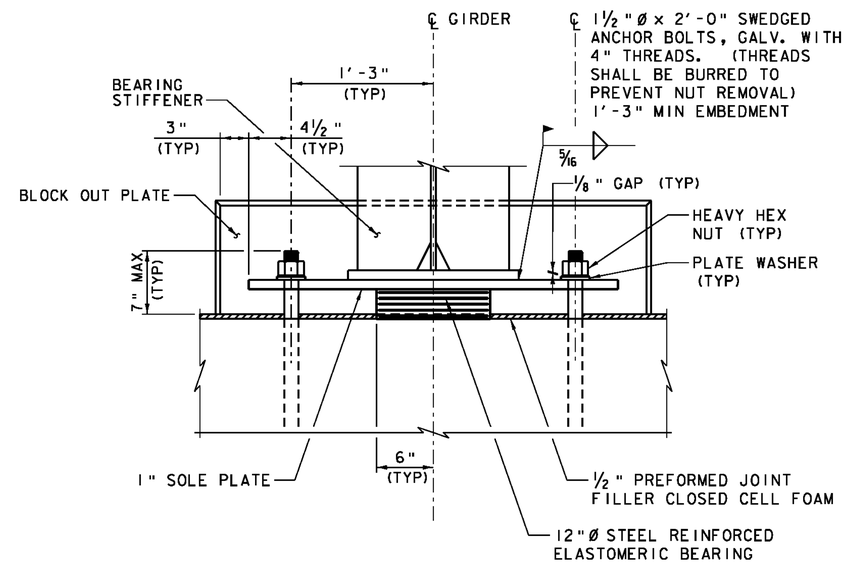

SECTION B-B

SCALE 1 1/2" = 1'-0"

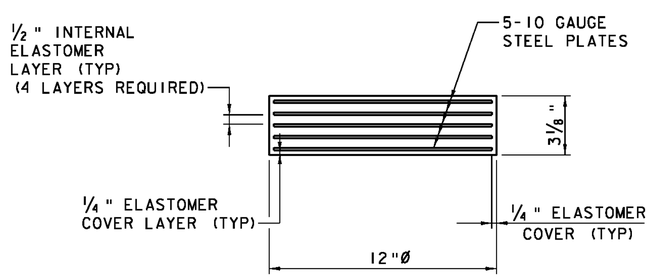

ELASTOMERIC BEARING PAD DETAIL

NOT TO SCALE

ALL MATERIALS AND FABRICATION SHALL BE PER SECTION 531 AND SECTION 731.

ALL BEARING DESIGNS SHALL BE PER THE AASHTO LRFD BRIDGE DESIGN SPECIFICATIONS 5TH EDITION AND IT'S LATEST REVISIONS.

ELASTOMER SHALL BE NEOPRENE OR NATURAL VIRGIN RUBBER.

DESIGN CRITERIA: (AASHTO METHOD "B")

A) TEMPERATURE RANGE: 150°F

B) 60 DUROMETER ELASTOMER, TEMPERATURE GRADE 4
Gmax. = 200 PSI
Gmin. = 130 PSI

C) MAXIMUM BEARING STRESS: 796 PSI

D) DESIGN ROTATION FOR LIVE LOAD: 0.0031 RAD. AT ABUTMENTS

E) MAX REACTION/BEAM:
DEAD LOAD: 32.6 K
LIVE LOAD: 57.5 K

VHB Vanasse Hangen Brustlin, Inc.

PROJECT NAME: THETFORD	
PROJECT NUMBER: BHF 0177(9)	
FILE NAME: z08j174brg01.dgn	PLOT DATE: 2/15/2012
PROJECT LEADER: M.A. COLGAN	DRAWN BY: B.M. KLINEFELTER
DESIGNED BY: G.S. GOODRICH	CHECKED BY: M.J. MOZER
ABUTMENT NO. 1 BEARING DETAILS	SHEET 43 OF 78