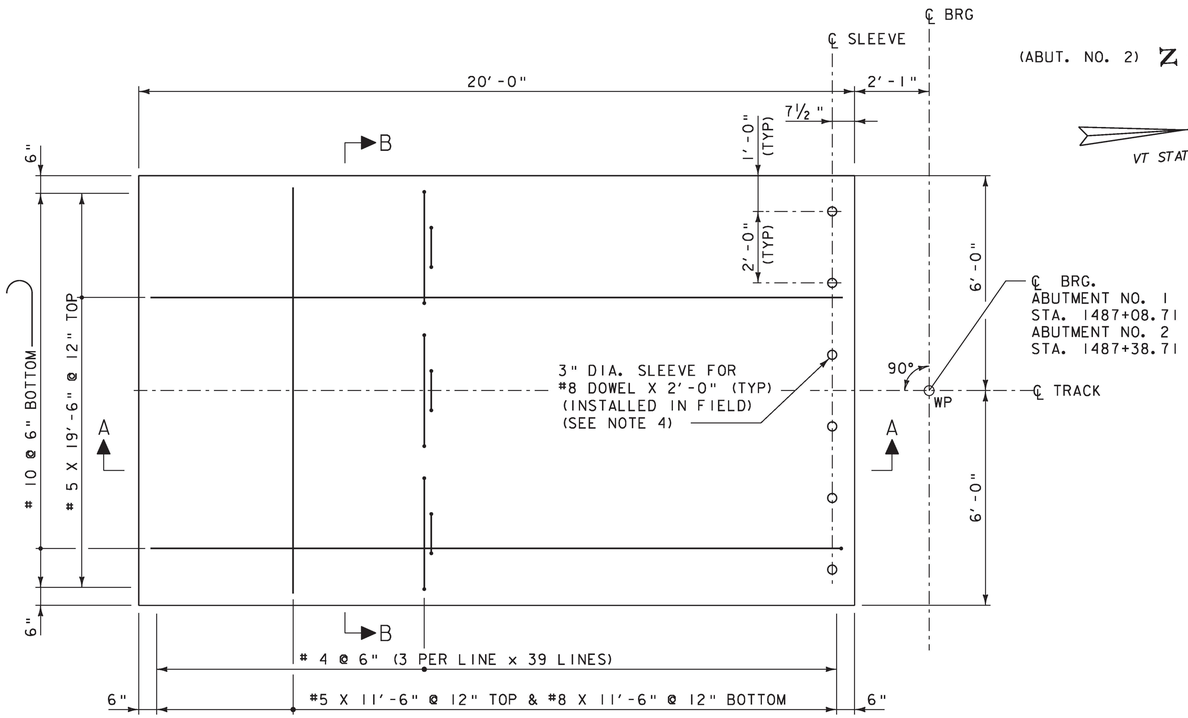

APPROACH SLAB NO. 1

APPROACH SLAB NO. 1 SHOWN, APPROACH SLAB NO. 2 SIMILAR BUT OPPOSITE HAND

SCALE: ½" = 1'-0"

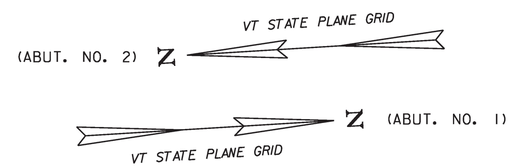

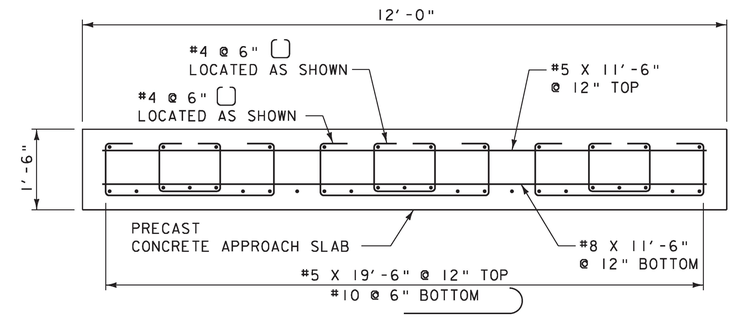

SECTION B-B

SCALE: ¾" = 1'-0"

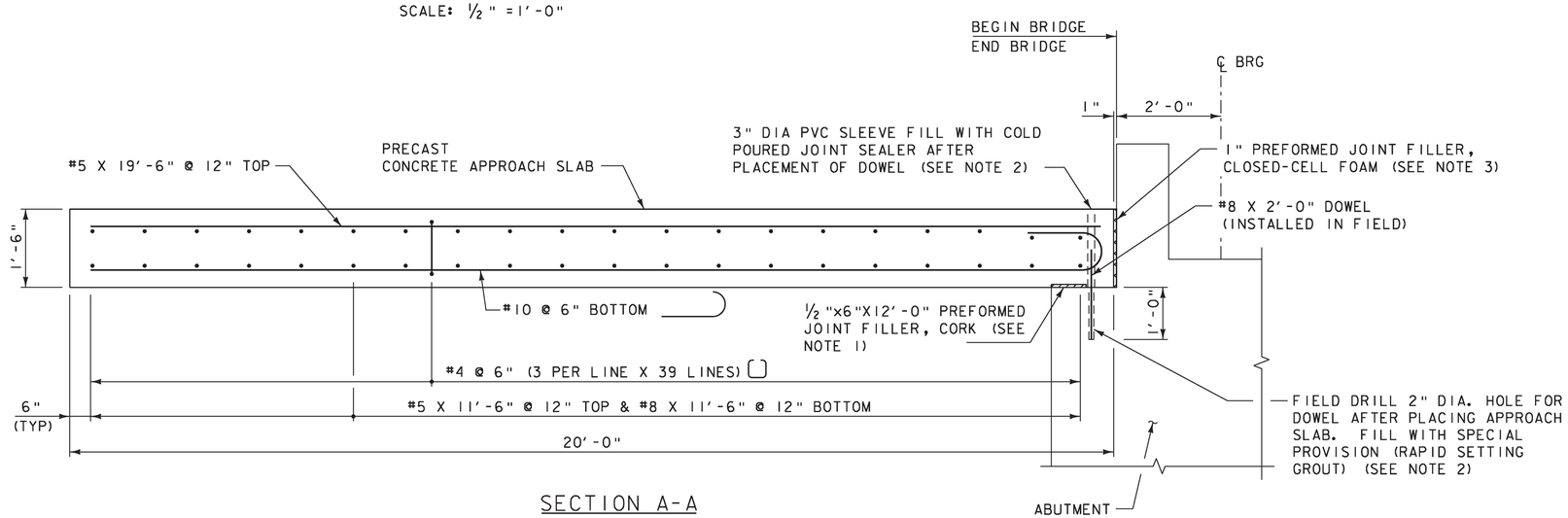

SECTION A-A

SCALE: ¾" = 1'-0"

NOTES:

1. EXPANSION JOINT MATERIAL ALONG BOTTOM FACE OF APPROACH SLAB SHALL BE CAST INTO THE APPROACH SLAB AND SHALL BE PER SUBSECTION 707.08. ALL COSTS ARE INCIDENTIAL TO THE CONTRACT ITEMS.
2. ALL COSTS FOR INSTALLATION OF PRECAST APPROACH SLAB DOWELS, SLEEVES, AND COLD POURED JOINT SEALER SHALL BE INCIDENTAL TO THE APPROPRIATE PRECAST APPROACH SLAB 540.10 ITEM. GROUTING OF DOWELS SHALL BE PAID FOR UNDER ITEM 900.640, "SPECIAL PROVISION (RAPID SETTING GROUT)".
3. PREFORMED JOINT FILLER, CLOSED-CELL FOAM SHALL BE PER SUBSECTION 707.09 AND PAID INCIDENTIAL TO THE CONTRACT ITEMS.
4. CONTRACTOR SHALL ENSURE THAT DOWELS AND DRILLING DO NOT CONFLICT WITH ANY REINFORCING.

VHB Vanasse Hangen Brustlin, Inc.

PROJECT NAME: DORSET	
PROJECT NUMBER: WCRS(8)	
FILE NAME: z08g224subas.dgn	PLOT DATE: 5/2/2014
PROJECT LEADER: A.P. GUYETTE	DRAWN BY: B.J. MASSE
DESIGNED BY: G.S. GOODRICH	CHECKED BY: L.S. GARDNER
APPROACH SLAB DETAILS	SHEET 24 OF 33

VHB 57320