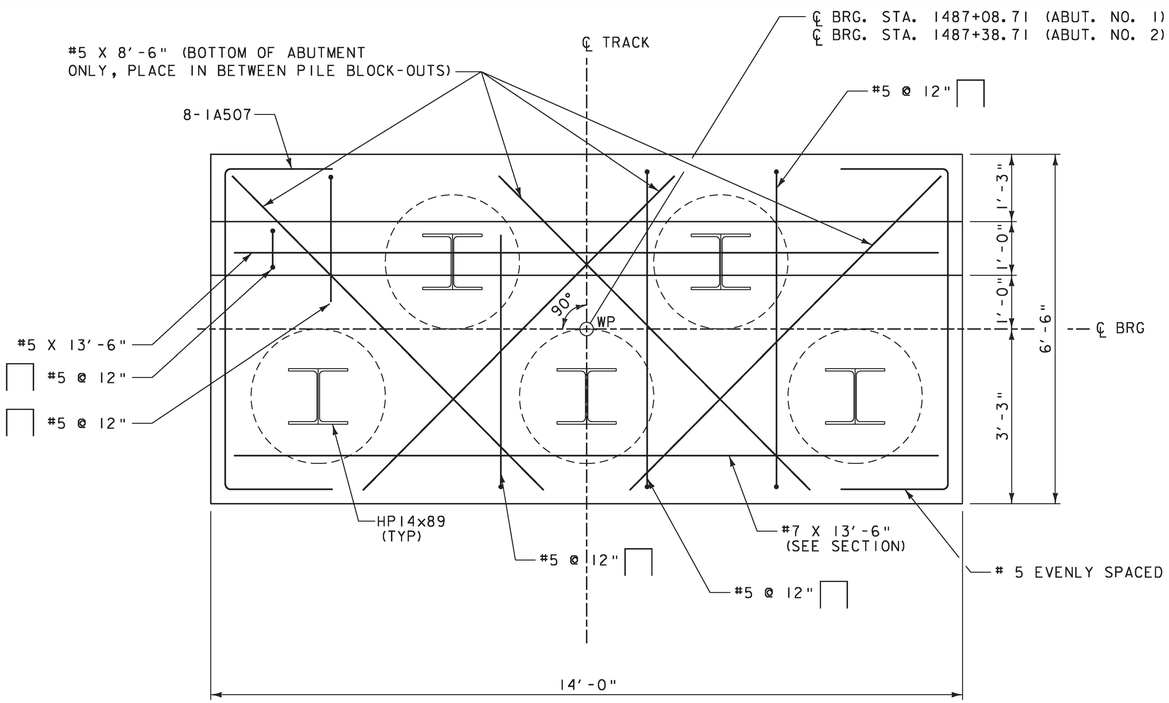

PLAN

SCALE: 3/4" = 1'-0"

FLOW → (ABUT. NO. 2)

(ABUT. NO. 1) ← FLOW

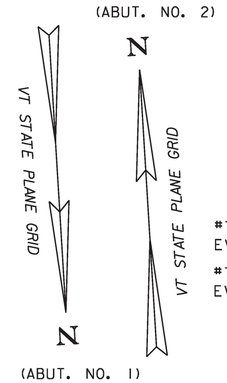

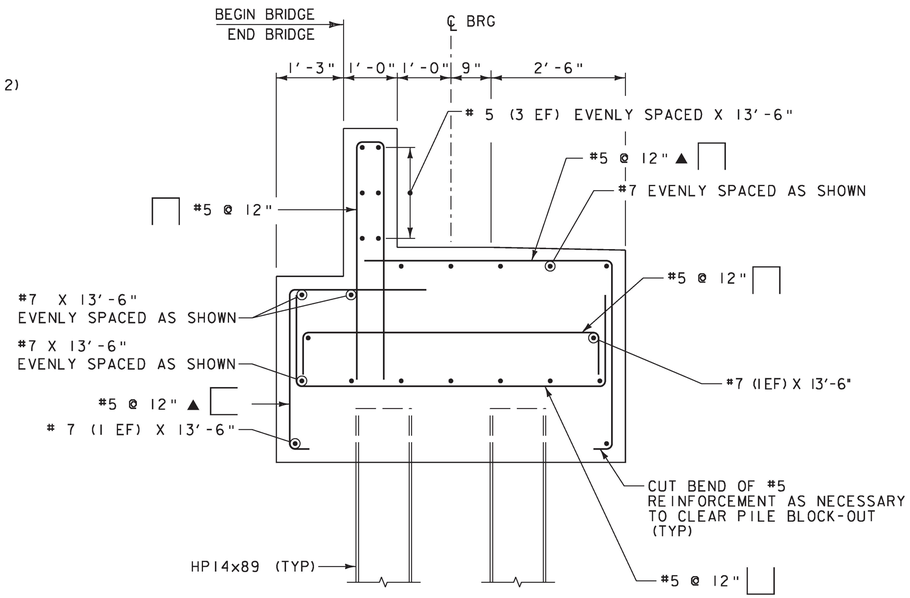

SECTION

SCALE: 3/4" = 1'-0"

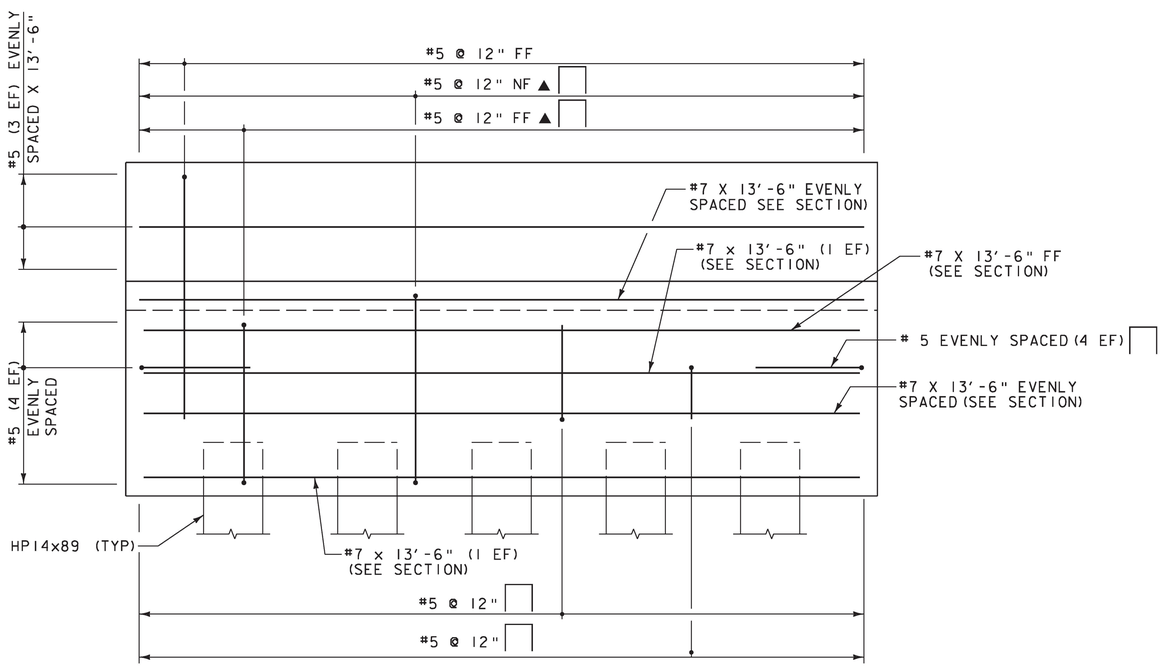

ELEVATION

SCALE: 3/4" = 1'-0"

NOTE:

NF = NEAR FACE
FF = FAR FACE
EF = EACH FACE
▲ = CUT TO FIT IN FIELD
3" CLEAR, UNLESS OTHERWISE SPECIFIED ON THE PLANS.

CONCRETE NOTE:

1. SEE SHEET 22 FOR MASONRY DETAILS.

Vanasse Hangen Brustlin, Inc.

PROJECT NAME: DORSET	
PROJECT NUMBER: WCRS(8)	
FILE NAME: z08g224subab2.dgn	PLOT DATE: 5/2/2014
PROJECT LEADER: A.P. GUYETTE	DRAWN BY: B.J. MASSE
DESIGNED BY: G.S. GOODRICH	CHECKED BY: L.S. GARDNER
ABUTMENT DETAILS (REINFORCING)	SHEET 23 OF 33

VHB 57320