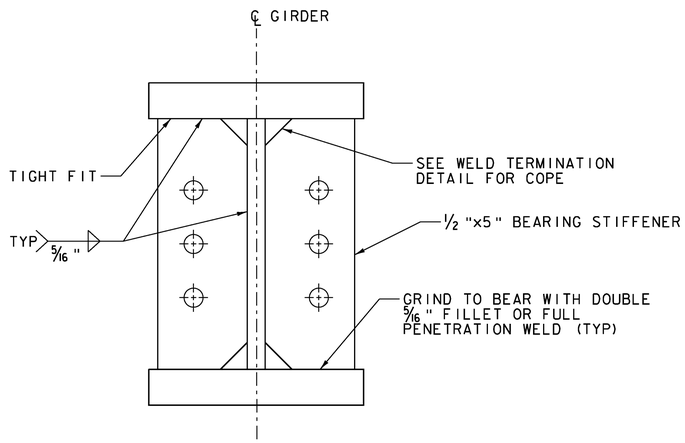

BEARING STIFFENER DETAIL
SCALE: 3" = 1'-0"

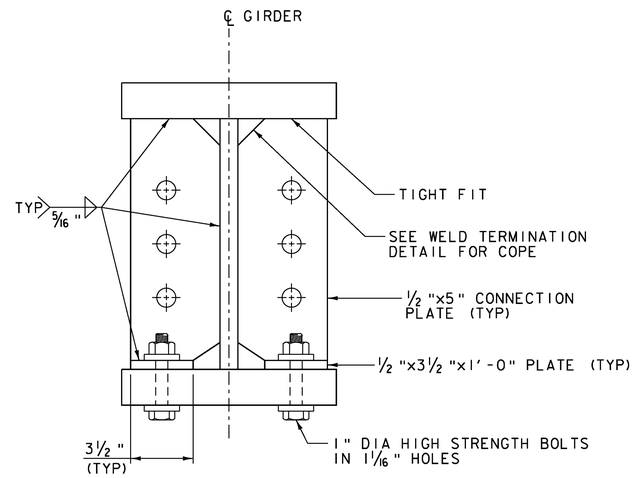

CONNECTION PLATE DETAIL
SCALE: 3" = 1'-0"

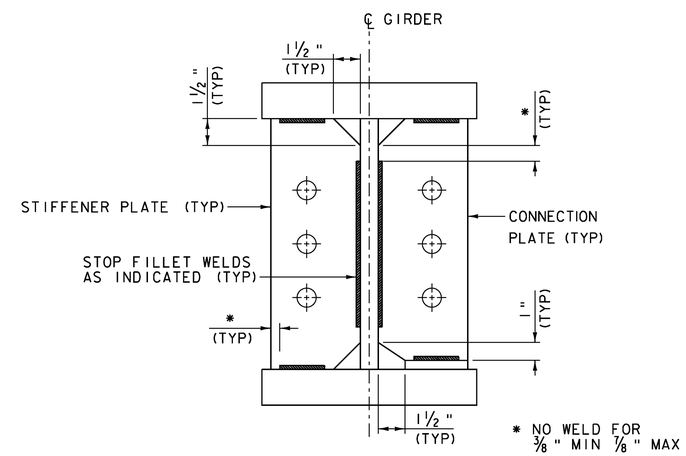

WELD TERMINATION AND COPING DETAIL
SCALE: 3" = 1'-0"

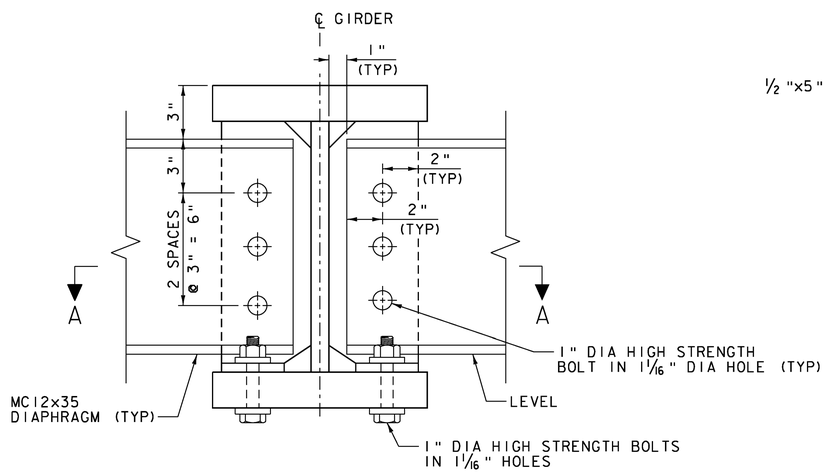

DIAPHRAGM
SCALE: 3" = 1'-0"

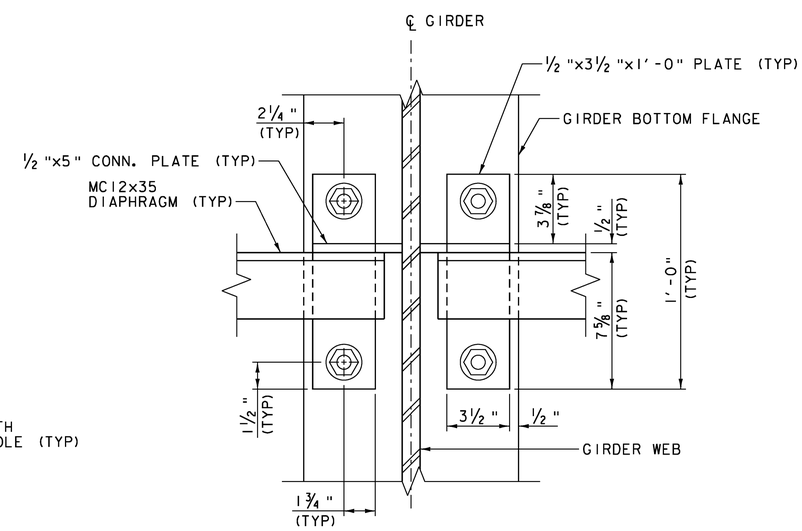

SECTION A-A
SCALE: 3" = 1'-0"

Vanasse Hangen Brustlin, Inc.

PROJECT NAME: DORSET	
PROJECT NUMBER: WCRS(8)	
FILE NAME: z08g224detailconnections.dgn	PLOT DATE: 4/10/2014
PROJECT LEADER: A.P. GUYETTE	DRAWN BY: J.W. GOLEK
DESIGNED BY: J.W. GOLEK	CHECKED BY: S.E. BURBANK
STEEL DETAILS	SHEET 20 OF 33

VHB 57320