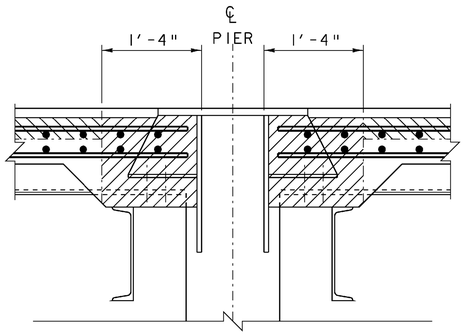


AREA OF PARTIAL REMOVAL OF STRUCTURE

AREA OF REPAIR OF CONCRETE SUPERSTRUCTURE SURFACE, CLASS II

NEW CONCRETE, "SPECIAL PROVISION (HIGH PERFORMANCE CONCRETE, CLASS AA LOW CEMENT)"

## PIER EXISTING SECTION

SCALE 1" = 1'-0"

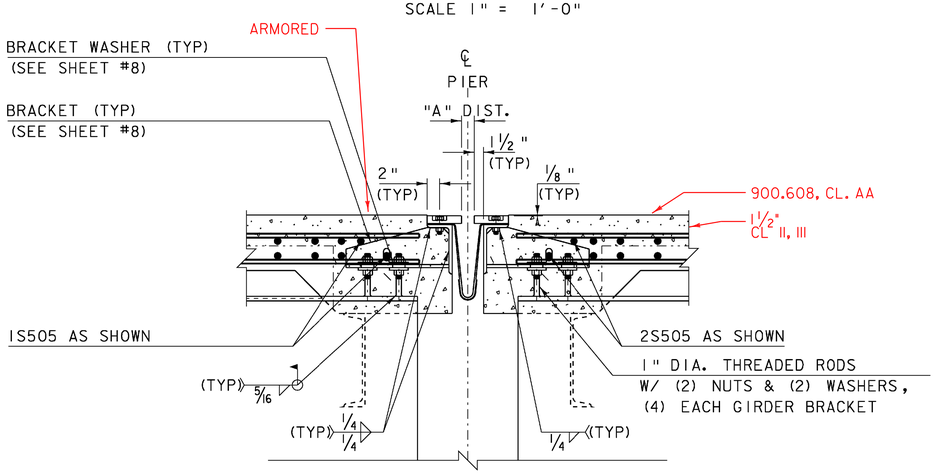


## NEW PIER SECTION AT GIRDERS

SCALE 1" = 1'-0"

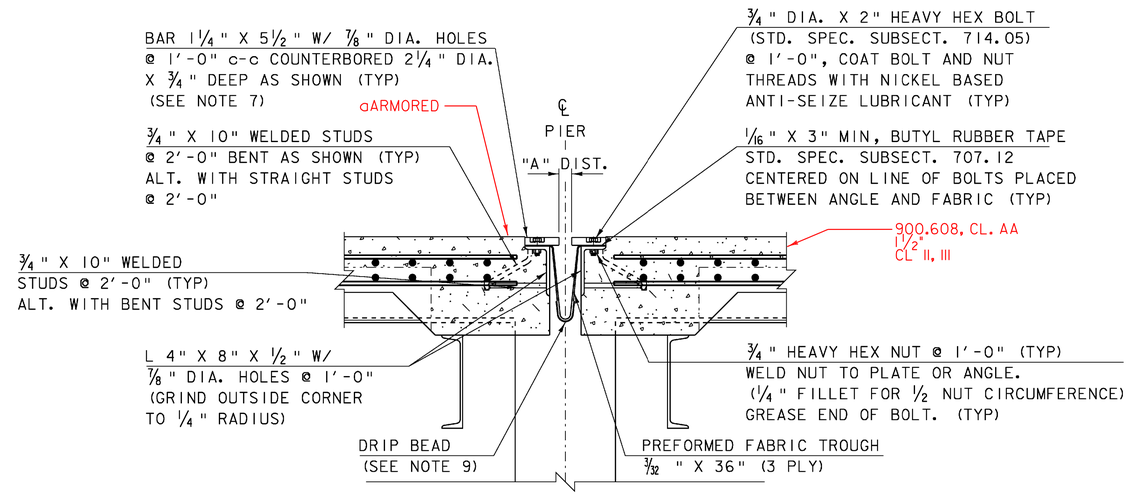


## NEW PIER SECTION BETWEEN GIRDERS

SCALE 1" = 1'-0"

1. DETAILS ON THE VERMONT JOINT DETAIL SHEETS ARE FOR ITEM 516.11 "BRIDGE EXPANSION JOINT (VERMONT)".

2. PREFORMED FABRIC MATERIAL SHALL BE CONTINUOUS FOR THE FULL LENGTH OF THE JOINT.

3. THE FINAL FINISH OF THE EXPANSION DEVICE SHALL BE COVERED DURING THE PLACING OF BRIDGE DECK CONCRETE.

4. ALL STEEL COMPONENTS SHALL BE GALVANIZED OR METALIZED AND MEET THE REQUIREMENTS OF SUBSECTION 516.02. THREADED RODS SHALL CONFORM TO THE REQUIREMENTS OF SUBSECTION 713.01 THE 4" x 8" x 1/2" ANGLE AND WELDED STUD ASSEMBLY MAY BE SUPPLIED WITHOUT GALVANIZING OR METALIZING.

5. THE ITEM "BRIDGE EXPANSION JOINT (VERMONT)" SHALL INCLUDE THE FABRICATION AND ERECTION OF THE COMPLETE JOINT ASSEMBLY INCLUDING ALL STEEL PLATES, BRACKETS, ANGLES, WELDED STUDS OR RODS, PREFORMED FABRIC DRAIN TROUGH MATERIAL AND PLASTIC DRAIN TUBES, BUTYL RUBBER TAPE AND ANY OTHER MISCELLANEOUS MATERIAL NECESSARY TO INSTALL JOINT.

6. THE 4" X 8" X 1/2" ANGLES SHALL BE FURNISHED AS ONE CONTINUOUS PIECE. THE 1 1/4" X 5 1/2" BARS EACH SIDE OF THE JOINT SHALL BE PROVIDED IN TWO EQUAL LENGTHS.

7. FILL COUNTERBORED HOLES WITH HOT POURED JOINT SEALER (SUBSECTION 707.04) AFTER BOLT INSTALLATION. PAYMENT FOR THE WORK SHALL BE INCIDENTAL TO ITEM 516.11 "BRIDGE EXPANSION JOINT, VERMONT".

8. THE EXPANSION JOINT SHALL BE SHOP ASSEMBLED AND SHIPPED AS ONE UNIT.

9. A DRIP BEAD CONSISTING OF 1/4" X 7" STRIP OF PREFORMED FABRIC MATERIAL SHALL BE CEMENTED TO THE BOTTOM OF THE FABRIC TROUGH USING AN ADHESIVE APPROVED BY THE MANUFACTURER. THE DRIP BEAD SHALL BE APPLIED 1" FROM THE DOWNSPOUT END OF THE TROUGH.

10. FABRIC TROUGH SHALL BE THOROUGHLY CLEANED AND FLUSHED AFTER PAVING OPERATION.

11. PRIOR TO GALVANIZING OR METALIZING, ALL CORNERS AND EDGES OF STEEL PLATES, SHAPES, ETC., SHALL BE GROUND TO A 1/16 INCH RADIUS.

12. TEMPORARY SHIPPING ATTACHMENTS SHALL BE ATTACHED BY BOLTING; WELDING WILL NOT BE PERMITTED.

13. PROJECTING THREADS OF THE 3/4" BOLTS IN THE JOINT SHALL BE GREASED BY THE CONTRACTOR PRIOR TO PLACING ADJACENT CONCRETE. THIS WILL FACILITATE BOLT REMOVAL IF REQUIRED IN THE FUTURE.

| TEMP | "A" DIST |
|---|---|
| 0°F | 1 7/16" |
| 15°F | 1 5/16" |
| 30°F | 1 3/16" |
| 45°F | 1 1/16" |
| 60°F | 15/16" |
| 75°F | 3/4" |
| 90°F | 5/8" |
| 105°F | 1/2" |

"A" IS THE SETTING AFTER DEAD LOADS ARE PUT IN PLACE.
NOTE: THE CONTRACTOR IS TO MEASURE THE DISTANCE BETWEEN TWO TOP FLANGES BEFORE AND AFTER CONCRETE REMOVAL. ANY CHANGE IN DISTANCE SHALL BE APPLIED TO "A".

SCALE 1" = 1'-0"
1 9 6 3 0 1 2

PROJECT NAME: MORETOWN
PROJECT NUMBER: STP DECK (37)

FILE NAME: 08c218details.dgn
PROJECT LEADER: C.P.WILLIAMS
DESIGNED BY: D.D. BEARD
VERMONT JOINT DETAILS 2

PLOT DATE: 15-APR-2009
DRAWN BY: D.D.BEARD
CHECKED BY: H. I. SALLS
SHEET 9 OF 25