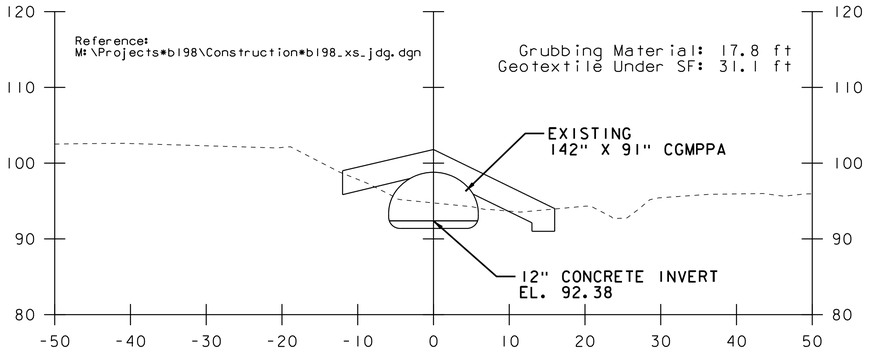

INLET
10+65

USED FOR
10+62

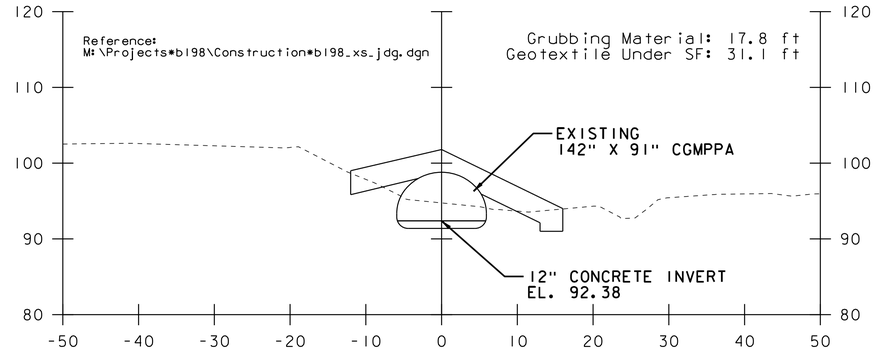

INLET
10+65

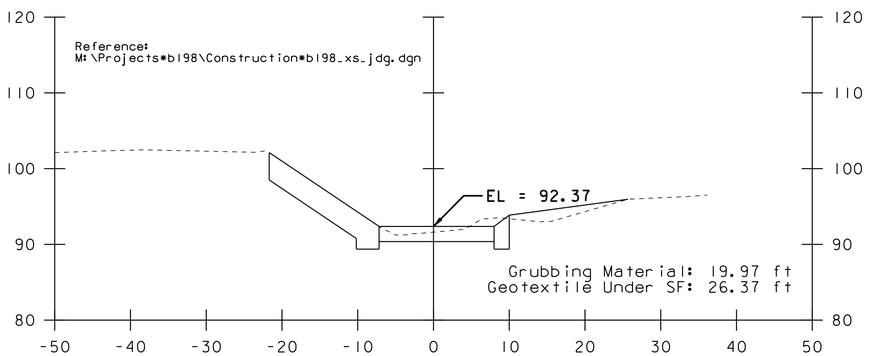

INLET
10+50

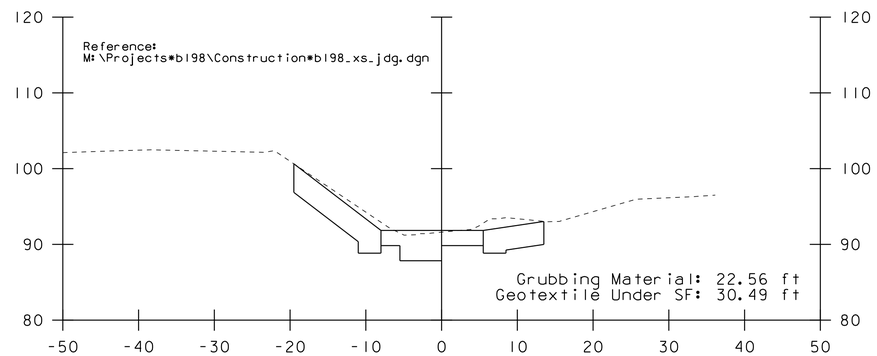

INLET
10+50

USED FOR
10+57

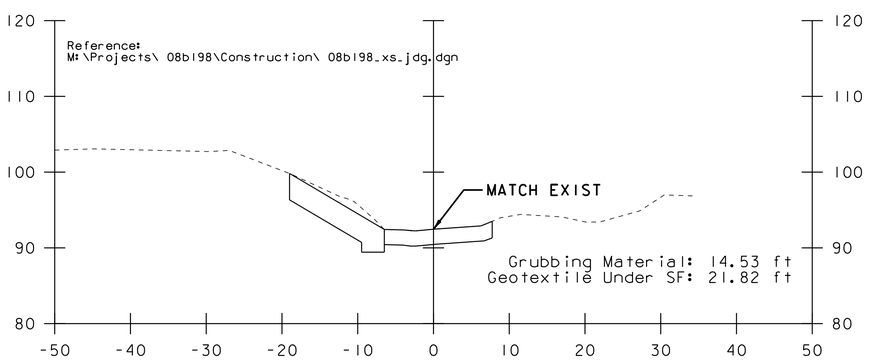

INLET
10+32

STA. 10+32 TO STA. 10+65