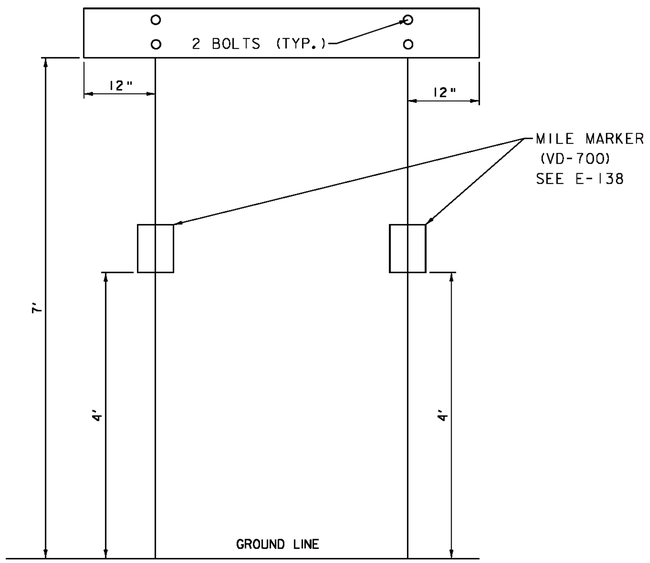

TOWN LINE SIGN PLACEMENT

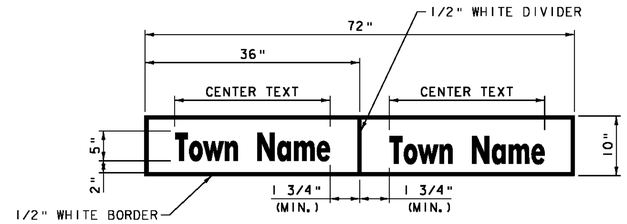

VD-024

1.) WORD TO WORD SPACING FOR COUNTIES AND TWO WORD TOWN NAMES IS ADJUSTABLE TO ACCOMMODATE DIMENSION REQUIREMENT.

2.) FONT SPACING MAY BE ADJUSTED TO MEET DIMENSION REQUIREMENT.

3.) DIMENSIONS SHOWN ARE APPROXIMATE AND MAY BE ADJUSTED SLIGHTLY TO ACCOMMODATE VARIOUS MANUFACTURER'S LETTER WIDTHS.

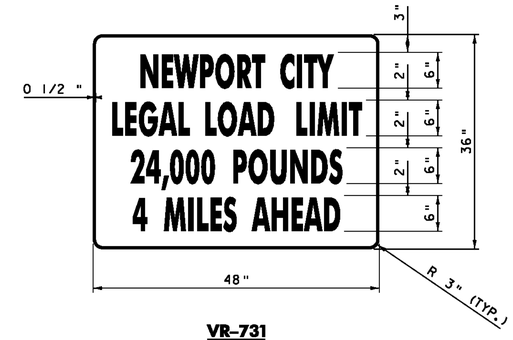

VR-731

BLACK ON WHITE
TYPE C LETTERS

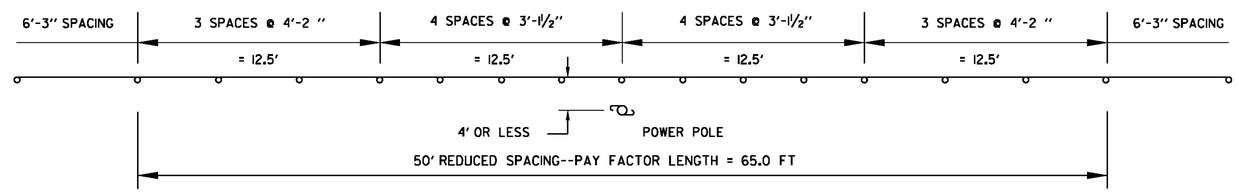

REDUCED SPACING GUARDRAIL DETAIL

OBJECTS WITHIN 4' OF GUARDRAIL (NTS)

NEWPORT
STA. 241+58 LT

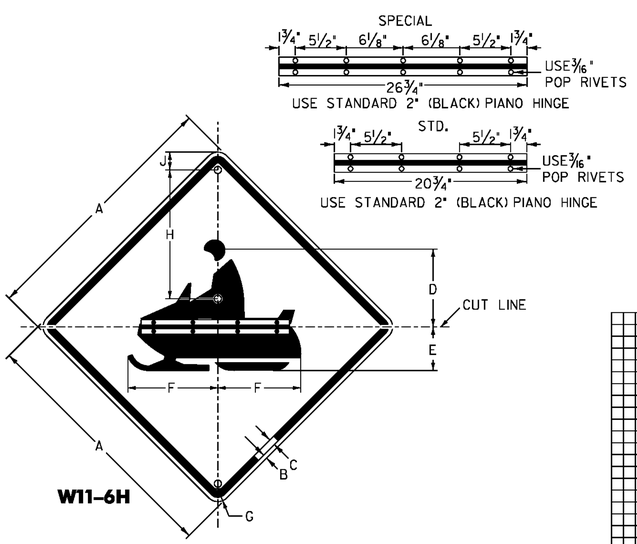

SIGN	DIMENSIONS (INCHES)								
	A	B	C	D	E	F	G	H	J
STD.	30	1/2	3/4	11 7/16	5 9/16	12 11/16	1 7/8	14	2 1/2
SPECIAL	36	5/8	7/8	14 1/8	6 3/4	15 1/4	2 1/4	19	2 1/2

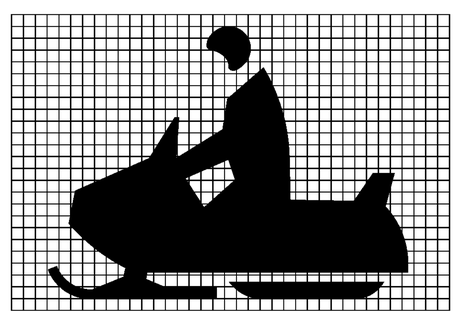

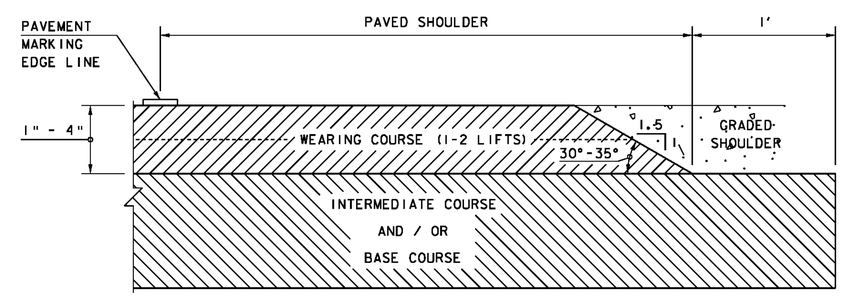

SAFETY EDGE DETAIL

NOT TO SCALE

NOTE: LEVELING COURSE MAY INCLUDE THE "SAFETY EDGE" AT THE CONTRACTOR'S CHOICE.

DETAILS ARE NOT TO SCALE

MISCELLANEOUS DETAIL SHEET 2

PROJECT NAME: NEWPORT-COVENTRY-NEWPORT
PROJECT NUMBER: STP 2802(1)

FILE NAME: 08b158.dgn
PROJECT LEADER: CDL
DESIGNED BY: SJL
PLOT FILE: 08b158-128.1

PLOT DATE: 8/3/2011
DRAWN BY: SJL
CHECKED BY: EPD
SHEET 128 OF 134