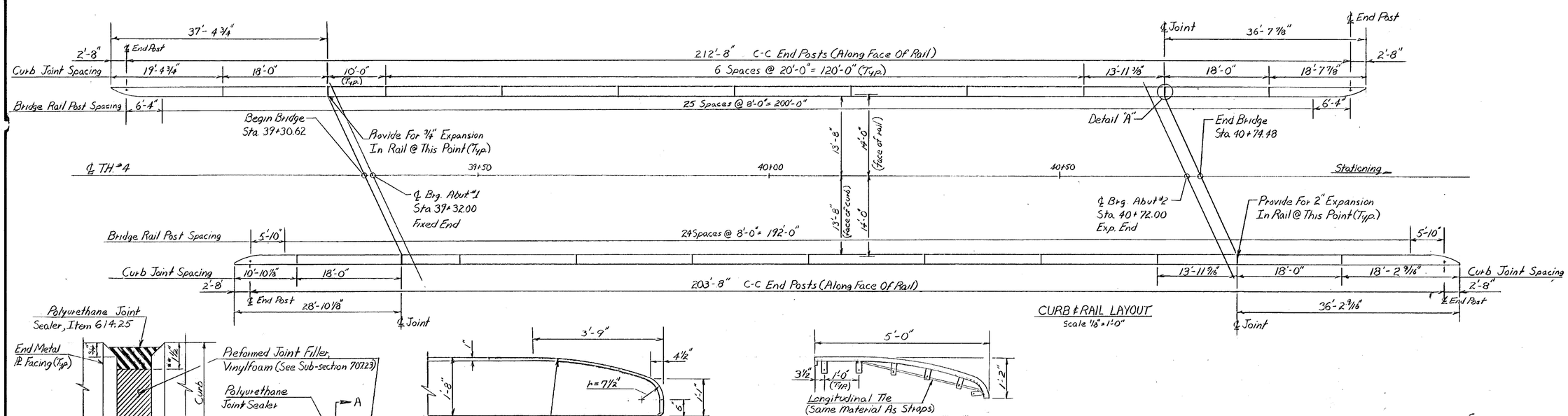

CURB & RAIL LAYOUT
Scale 1/8" = 1'-0"

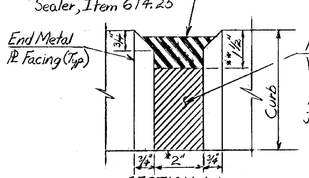

SECTION A-A
Scale: 1/8" = 1'

* 2" @ Expansion End
1" @ Fixed End

** 1 1/2" @ Expansion End
1 1/4" @ Fixed End

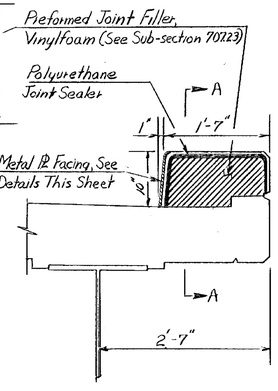

DETAIL-A
N.T.S.

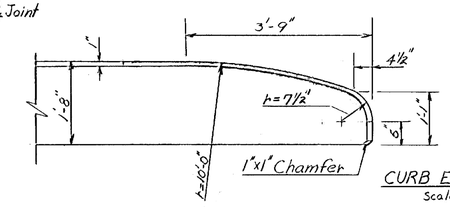

CURB END DETAIL
Scale: 3/4" = 1'-0"

CURB END DETAILS
Scale: 3/4" = 1'-0"

Note: End Sections Shall Have 5 Sets Of Straps And One Longitudinal Tie Top & Bottom.

Note: If Straps Are Welded To Epoxy Coated Bars All Damaged Areas Of Bars Shall Be Cleaned And Re-epoxy Coated.

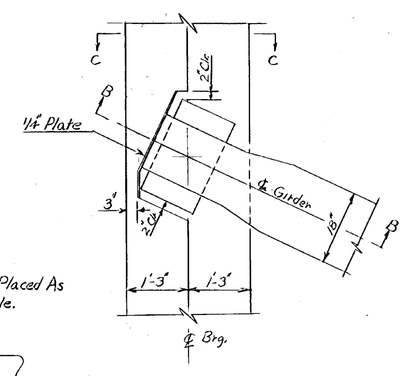

PLAN OF FIXED END BEARING
Scale: 3/4" = 1'-0"

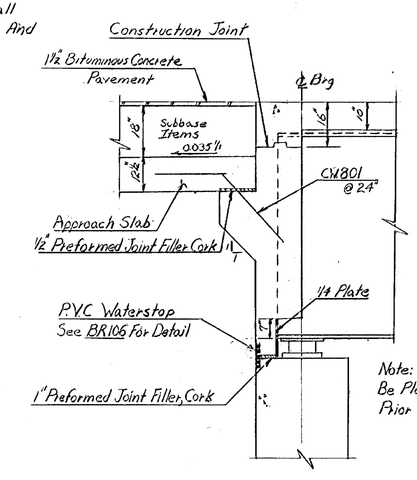

Note: The Curtainwall Shall Be Placed A Min. Of 24 Hrs. Prior To Deck Placement.

SECTION B-B
Scale: 1/2" = 1'-0"

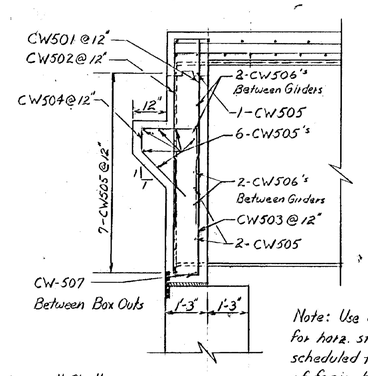

Note: Use extra CW506's for horz. steel not scheduled for outside of facia beams. Cut & bend to fit.

SECTION C-C
Scale: 1/2" = 1'-0"

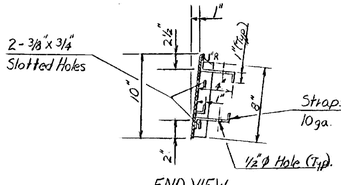

END VIEW

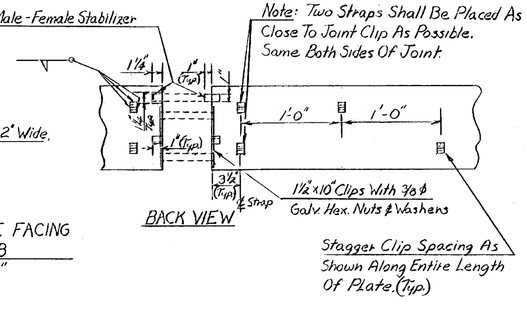

BACK VIEW

Note: Two Straps Shall Be Placed As Close To Joint Clip As Possible. Same Both Sides Of Joint.

METAL PLATE FACING FOR CURB
Scale: 1 1/2" = 1"

Prior To Fabrication, Shop Drawings Shall Be Submitted To The Structures Division For Approval In Accordance With Section 105.03

NOTES

1. For 3-Rail Aluminum Bridge Rail details see SB-R1-71, Sheets 1 & 2. For details of approach railing see BR Sheet #112
2. The Metal Plate Facing for the curb shall be fabricated using A.S.T.M. A-569, galvanized, with a maximum length of 10 Ft. Sections shall be bolted together with 3/8" Ø x 3/4" long A.S.T.M. A-307 bolts, galvanized. (AASHTO M-232) All elements shall be 10 ga. thickness.

STATEWIDE - SOUTHWEST REGION
BHF MEMB(20)
SHEET 46 OF 47
BRIDGE D23
FOR REFERENCE ONLY

STATE OF VERMONT
AGENCY OF TRANSPORTATION

TOWN OF SUNDERLAND	Bridge No. 28
HIGHWAY NO. TOWN HIGHWAY #4	Log Sta.
	Surv. Sta. 1255+50.00
TH #4 over ARTERIAL US. RTE. 7	
CURB & CURTAIN WALL DETAILS.	
Designed by A.W. Elwood	Drawn by R. Ranallo
Checked by A.W.E. date 10-80	Bridge Design Supervisor R.S. Haupt date 10-80
PROJECT SUNDERLAND-MANCHESTER	PROJECT NO. F019-1(9) C-1
Bridge Sheet No. BR105	Sheet 99 of 429

BRUNING 44-131-40151

BR-6