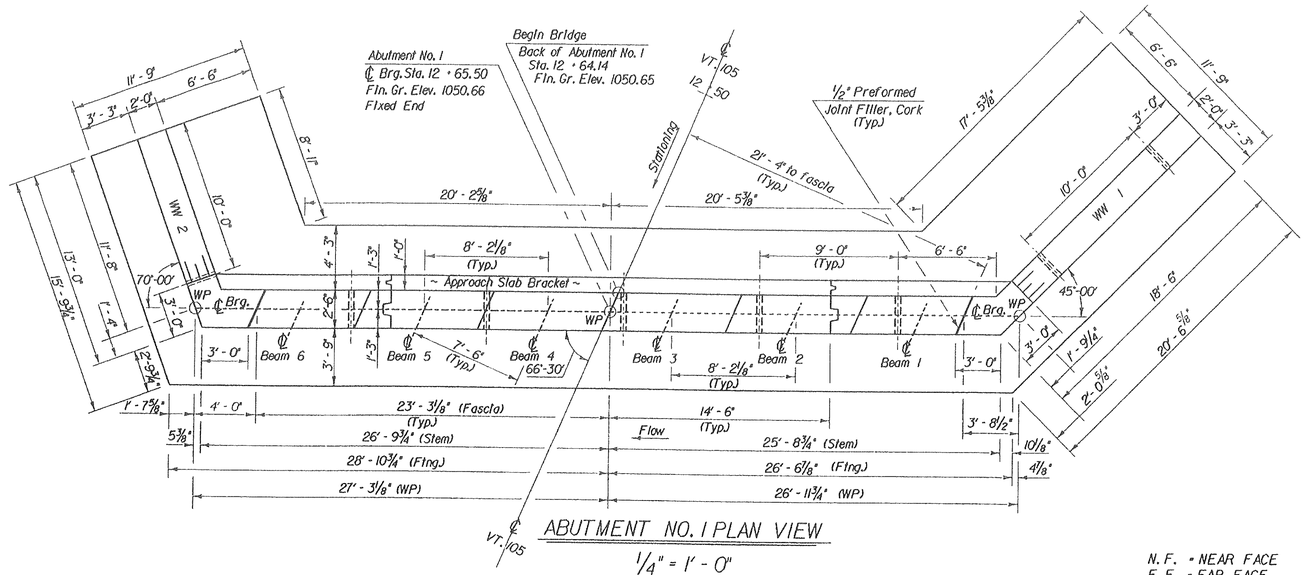

ABUTMENT NO. 1 PLAN VIEW

1/4" = 1' - 0"

N. F. = NEAR FACE
F. F. = FAR FACE
E. F. = EACH FACE
▲ = CUT TO FIT IN FIELD
10' - 0" MAXIMUM SPACING ON WEEP HOLES

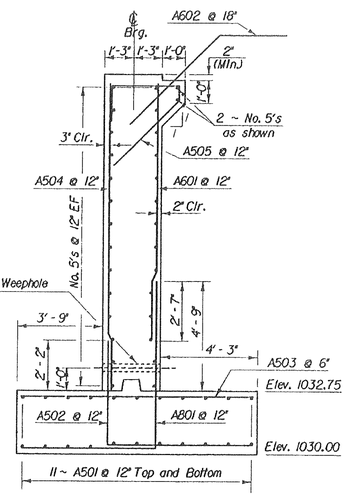

TYPICAL ABUTMENT SECTION

3/8" = 1' - 0"

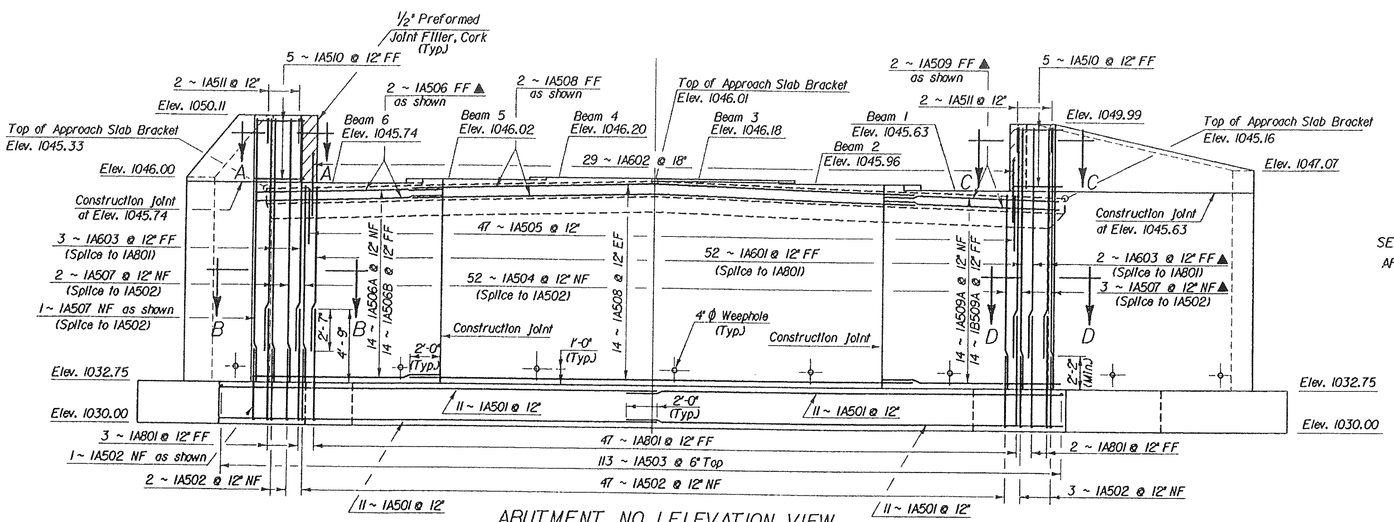

ABUTMENT NO. 1 ELEVATION VIEW

1/4" = 1' - 0"

SECTIONS A-A, B-B, C-C AND D-D ARE SHOWN ON SHEET BR III

STATEWIDE – N.E. REGION
BHF MEMB(19)
SHEET 23 OF 80
BRIDGE No. 96
FOR REFERENCE ONLY

STATE OF VERMONT
AGENCY OF TRANSPORTATION

Town Of BLOOMFIELD	Bridge No. 96
Highway No. VT. 105	Log Sta. 39 + 61 / Surv. Sta. 13 + 00.5
VT. 105 OVER THE NULHEGAN RIVER	
ABUTMENT NO. 1 PLAN & ELEVATION	
Designed By C. W. Meunier	Drawn By D.W. Newton
Checked By P. A. Maza Date Nov. '89	Bridge Design Supervisor D. E. Lathrop Date 7/90
PROJECT BLOOMFIELD	PROJECT NO. BRF034-3(13)S
I.G.C. Info. ZHI:[30,32]78F185ABT.DGN PRF:78F185ABI	
Bridge Sheet No. BR 108	Sheet 24 of 65