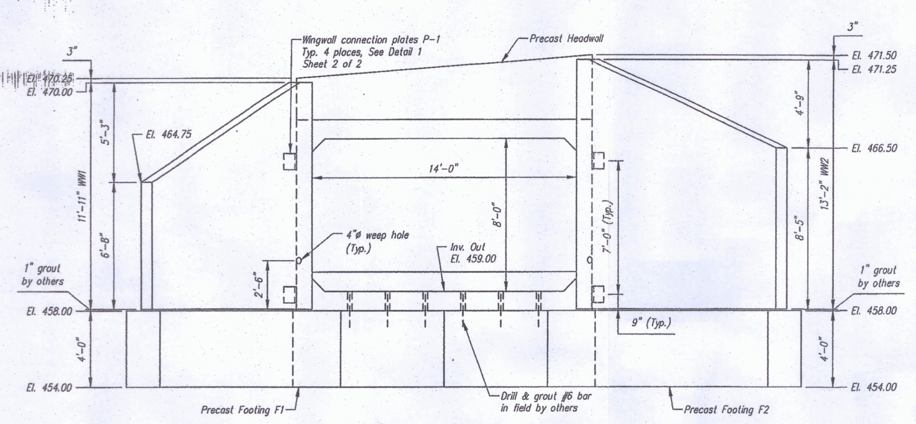

ELEVATION (C-C / 1of2)

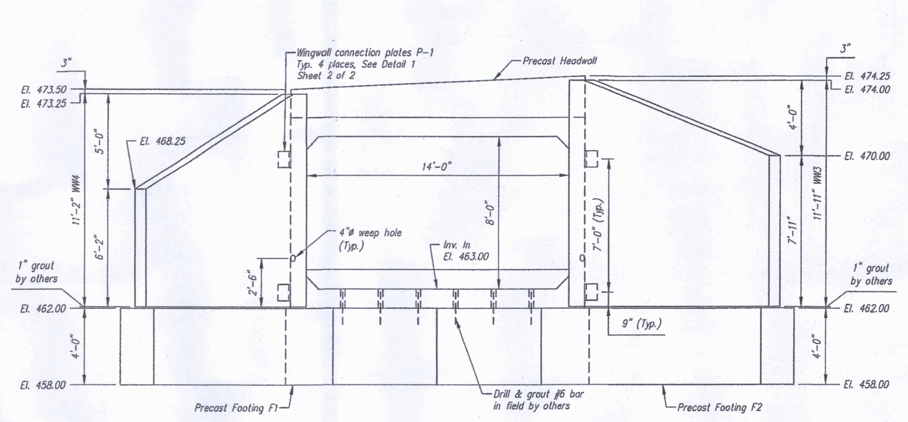

ELEVATION (D-D / 1of2)

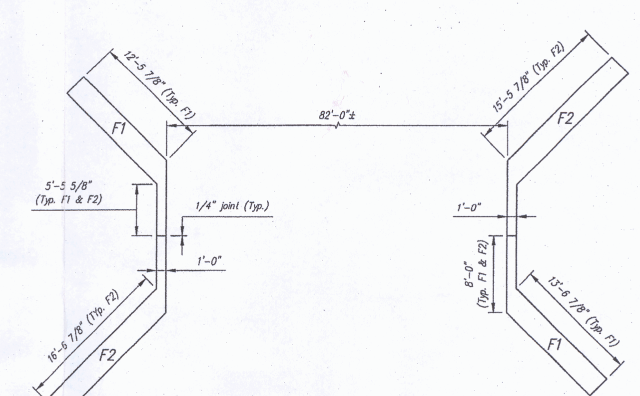

FOOTING PLAN

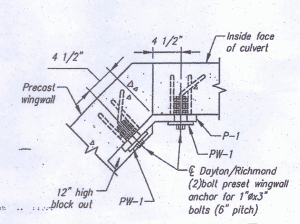

CONNECTION DETAIL (1 / 2of2)

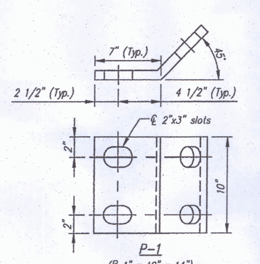

P-1
(℄ 1" x 10" x 14")
(Galvanized as per ASTM A153)
(Total required = 8)

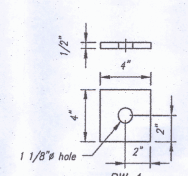

PW-1
(℄ washer, 1/2" x 4" x 4")
(Galvanized as per ASTM A153)
(Total required = 32)

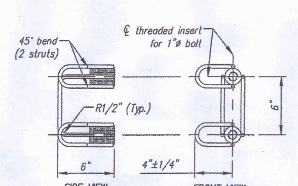

DAYTON/RICHMOND TWO BOLT PRESET ANCHOR

WINGWALL GENERAL NOTES:

1. The wingwalls have been designed for general site conditions. The project engineer shall be responsible for the structure's suitability to the existing site conditions and for the hydraulic evaluation — including scour and confirmation of soil conditions.

2. Prior to construction, contractor must verify all elevations shown through the engineer.

DESIGN DATA

Design Method: Load factor per AASHTO Specification
Assumed Allowable Soil Bearing: 3000 psf
Wingwalls designed for Earth Pressure

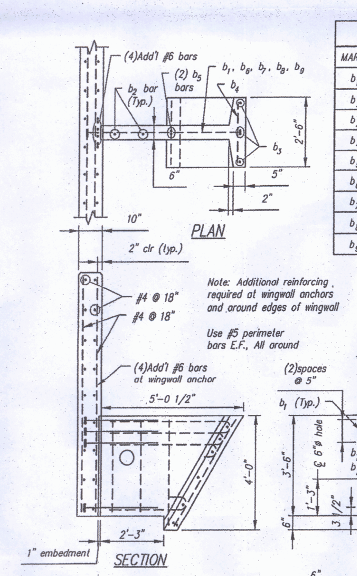

Note: Additional reinforcing required at wingwall anchors and around edges of wingwall

Use #5 perimeter bars E.F., All around

BAR LIST

MARK	QTY.	SIZE	a	TYPE	LENGTH
b_1	4	#6	2'-7"	3	——
b_2	2	#5	——	Str.	3'-2"
b_3	4	#5	——	Str.	4'-2"
b_4	7	#5	——	Str.	2'-2"
b_5	2	#5	3'-8"	2	——
b_6	1	#5	2'-9"	1	——
b_7	1	#5	3'-9"	1	——
b_8	1	#5	4'-0"	1	——
b_9	1	#5	4'-3"	1	——

Note: "Str." denotes straight bar.
Standard clearance = 2"

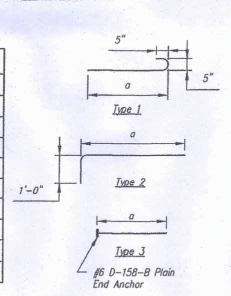

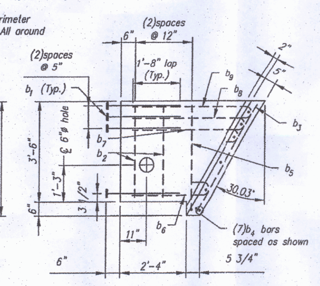

PRECAST ANCHOR
TYPE C

BACKFILL DESCRIPTION ⚠

Group Classification	A-1-a	A-1-b	A-3	A-2-4	A-2-5	A-2-6	A-2-7
	A-1			A-2			
Sieve Analysis, Percent Passing							
No. 10	50 max.						
No. 40	30 max.	50 max.	51 min.				
No. 200	15 max.	25 max.	10 max.	35 max.	35 max.	35 max.	35 max.
Characteristics of Fraction Passing No. 40							
Liquid Limit				40 max.	41 min.	40 max.	41 min.
Plasticity Index	6 max.		N.P.	10 max.	10 max.	11 min.	11 min.
Usual Types of Significant Constituent Materials	Stone Fragments, Gravel & Sand		Fine Sand	Silty or Clayey Gravel and Sand			
General Rating as Subgrade	Excellent to Good						

NOTES
⚠ 1. BACKFILLING OPERATIONS WITHIN THE C.B.Z. SHALL BE PERFORMED IN LIFTS OF 8" OR LESS (LOOSE DEPTH).
2. MAXIMUM DRY DENSITY SHALL BE DETERMINED BY AASHTO T-99 OR OTHER APPROVED METHODS.
3. BACKFILL SHALL BE COMPACTED IN LAYERS UNTIL THE DENSITY IS NOT LESS THAN 95% OF THE MAXIMUM DRY DENSITY.

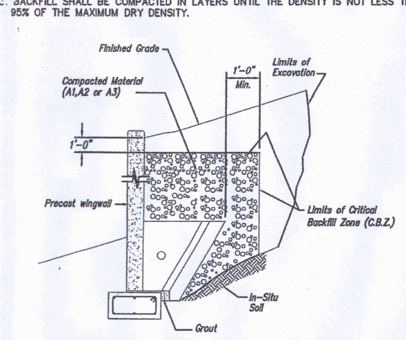

WINGWALL BACKFILL REQUIREMENTS

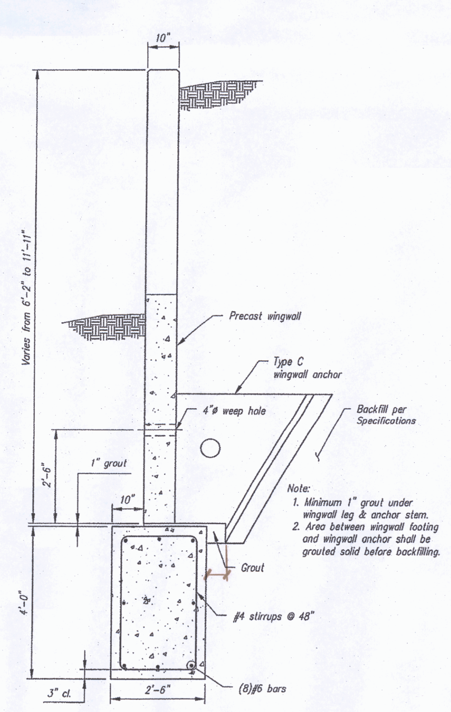

Note:
1. Minimum 1" grout under wingwall leg & anchor stem.
2. Area between wingwall footing and wingwall anchor shall be grouted solid before backfilling.

TYPICAL WINGWALL SECTION

RECEIVED
CK'D BY JEL OK'D BY KmH
JUL 24 2009
RESUBMIT ____ APPROVED ✓
BY KmH DATE 8/4/09

Contractor is to verify that all information shown on drawings has been thoroughly checked, complies with the contract documents and is adequate to meet the field conditions. Some dimensions and details may differ slightly from contract drawings to accommodate the manufacturing or design process. Approval of this drawing indicates that any deviation from the contract documents has been reviewed and found to be acceptable. Production will not commence until receipt of signed, approved shop drawings.

This drawing contains information proprietary to CONCRETE SYSTEMS, INC. This drawing is disclosed with the understanding that it will be retained in confidence and its use limited solely to the purpose for which it is disclosed. It is understood that no reproduction of this drawing is authorized without permission from CONCRETE SYSTEMS, INC. and that it will be returned to CONCRETE SYSTEMS, INC. upon request.

Rev.	Date	DESCRIPTION	By
5			
4			
3			
2			
1	7/23/2009	Deleted A4 soil classification from use as backfill material for wing walls	cmv

REVISIONS

This drawing is based upon information provided from the following documents and/or sources:
Engineer: VAOT
Project No: NH CULV (15)
Drawings: Proposed Improvement Bridge Project; Sheets 1 through 27 of 27 sheets
Specifications: Vermont Project Rockingham NH CULV (15); Labeled "This is a Sample Proposal and not to be used for bid purposes"
Other Sources:

CSI
Concrete Systems Inc.
9 Commercial St., Hudson, NH,03051
Phone 603-889-4163
Fax 603-889-2417

STATE AGENCY: VAOT

Drawn By: M SCOTT — Date: 06/20/2009
Checked By: B KOLAWOLE — Date: 06/24/2009
Approved By:

RENAUD BROTHERS
VT 103 CULVERT – BRIDGE NO. 4
BELLOWS FALLS, VT

D — BOX CULVERT WINGWALL DETAILS — REV 1
Drawing No. C19859–L01–B
Quantity: | Project No: | SHEET 2 OF 2