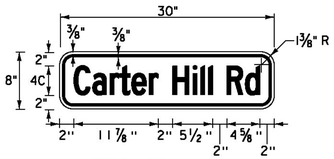

W16-8P

LOCATION: HIGHGATE: VT ROUTE 78
STA. 113+80, RT
STA. 129+90, LT

COLOR: BLACK BORDER AND TEXT (RETROREFLECTIVE)
YELLOW BACKGROUND (RETROREFLECTIVE)

MATERIAL: PER THE TRAFFIC SIGN TABLE SEE SHEET 119

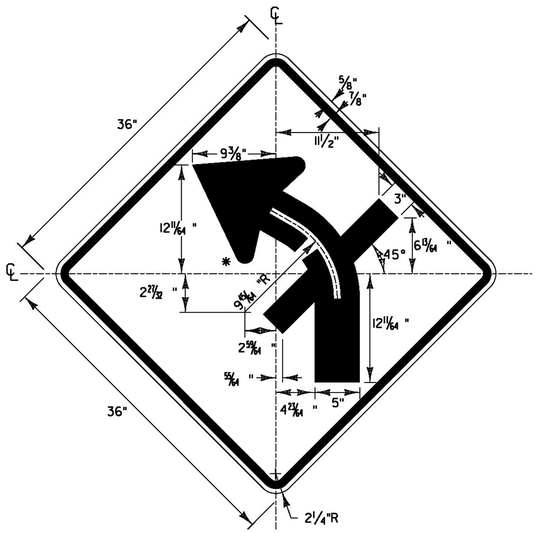

W1-10L VARIATION

LOCATION: HIGHGATE
STA. 154+44, RT

COLOR: BLACK BORDER & SYMBOL
WITH YELLOW (RETROREFLECTIVE) BACKGROUND

MATERIAL: PER THE TABLE ON SHEET 119

* FOR 5" ARROW DETAIL SEE SHEET 119

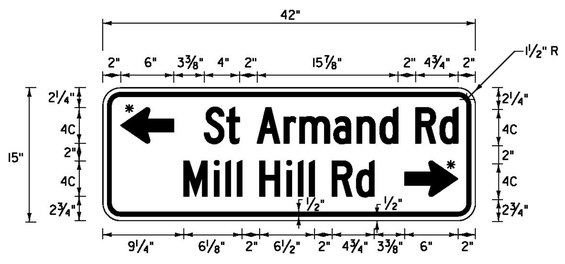

W16-8aP

LOCATION: HIGHGATE: VT ROUTE 78
STA. 154+44, RT

COLOR: BLACK BORDER AND TEXT (RETROREFLECTIVE)
YELLOW BACKGROUND (RETROREFLECTIVE)

MATERIAL: PER THE TRAFFIC SIGN TABLE SEE SHEET 119

* FOR ARROW DETAIL SEE SHEET 119

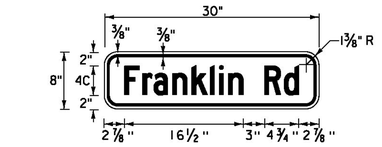

W16-8P

LOCATION: HIGHGATE: VT ROUTE 78
STA. 237+86, RT
STA. 253+97, LT

COLOR: BLACK BORDER AND TEXT (RETROREFLECTIVE)
YELLOW BACKGROUND (RETROREFLECTIVE)

MATERIAL: PER THE TRAFFIC SIGN TABLE SEE SHEET 119

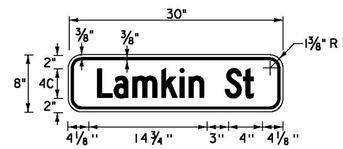

W16-8P

LOCATION: HIGHGATE: VT ROUTE 78
STA. 289+97, LT

COLOR: BLACK BORDER AND TEXT (RETROREFLECTIVE)
YELLOW BACKGROUND (RETROREFLECTIVE)

MATERIAL: PER THE TRAFFIC SIGN TABLE SEE SHEET 119

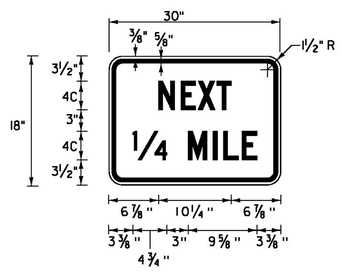

LOCATION: HIGHGATE: VT ROUTE 78
STA. 158+60, RT
STA. 171+86, LT

COLOR: BLACK BORDER & LEGEND
WITH YELLOW (RETROREFLECTIVE) BACKGROUND

MATERIAL: PER THE TABLE ON SHEET 119

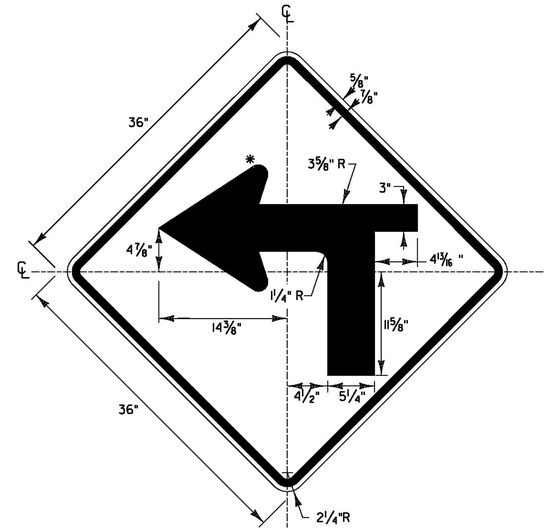

W1-1L VARIATION

LOCATION: HIGHGATE
STA. 352+05, RT

COLOR: BLACK BORDER & SYMBOL
WITH YELLOW (RETROREFLECTIVE) BACKGROUND

MATERIAL: PER THE TABLE ON SHEET 119

* FOR 5 1/4" ARROW DETAIL SEE SHEET 119

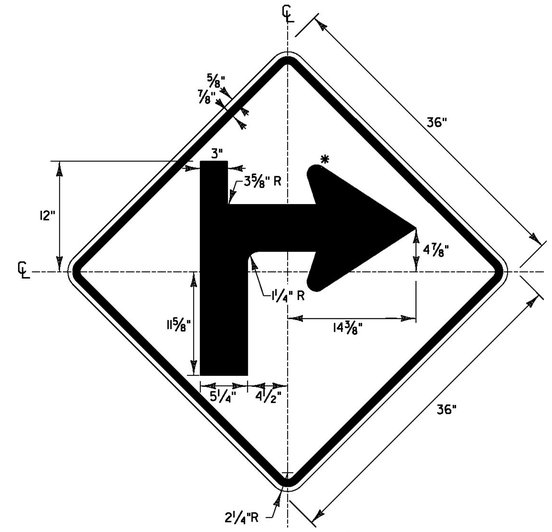

W1-1R VARIATION

LOCATION: HIGHGATE
STA. 359+50, LT

COLOR: BLACK BORDER & SYMBOL
WITH YELLOW (RETROREFLECTIVE) BACKGROUND

MATERIAL: PER THE TABLE ON SHEET 119

* FOR 5 1/4" ARROW DETAIL SEE SHEET 119

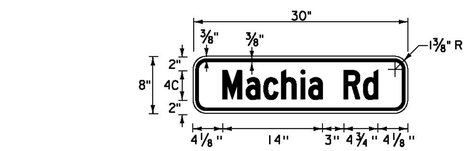

W16-8P

LOCATION: HIGHGATE: VT ROUTE 78
STA. 352+05, RT
STA. 359+50, LT

COLOR: BLACK BORDER AND TEXT (RETROREFLECTIVE)
YELLOW BACKGROUND (RETROREFLECTIVE)

MATERIAL: PER THE TRAFFIC SIGN TABLE SEE SHEET 119

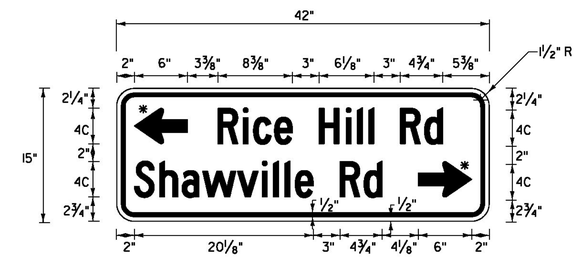

W16-8aP

LOCATION: SHELDON: VT ROUTE 78
STA. 19+00, RT

COLOR: BLACK BORDER AND TEXT (RETROREFLECTIVE)
YELLOW BACKGROUND (RETROREFLECTIVE)

MATERIAL: PER THE TRAFFIC SIGN TABLE SEE SHEET 119

* FOR ARROW DETAIL SEE SHEET 119

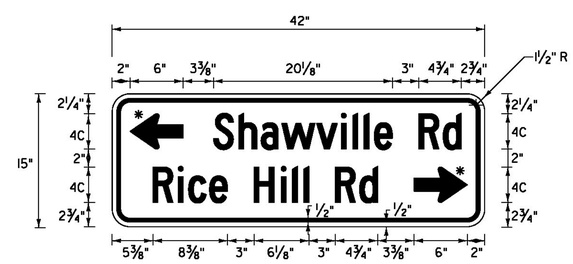

W16-8aP

LOCATION: SHELDON: VT ROUTE 78
STA. 24+50, LT

COLOR: BLACK BORDER AND TEXT (RETROREFLECTIVE)
YELLOW BACKGROUND (RETROREFLECTIVE)

MATERIAL: PER THE TRAFFIC SIGN TABLE SEE SHEET 119

* FOR ARROW DETAIL SEE SHEET 119

NOT TO SCALE

NOTE: SEE TRAFFIC SIGN NOTES ON SHEET 119.

Stantec

TRAFFIC SIGN DETAIL SHEET #7

PROJECT NAME: SWANTON-SHELDON
PROJECT NUMBER: STP 2715(1)

FILE NAME: p07c186.dgn
PROJECT LEADER: G. EDWARDS
DESIGNED BY: G. BARRETT
PLOT DATE: 4/24/2014
DRAWN BY: G. BARRETT
CHECKED BY: M. FOISY
SHEET 118 OF 121