646.602 TEMPORARY 4" WHITE LINE, PAINT
646.402 DURABLE 4" WHITE LINE, THERMOPLASTIC
25+50 TO 36+50 SOLID LT
25+50 TO 36+50 SOLID RT

646.612 TEMPORARY 4" YELLOW LINE, PAINT
646.412 DURABLE 4" YELLOW LINE, THERMOPLASTIC
25+50 TO 36+50 SOLID LT & RT

621.205 STEEL BEAM GUARDRAIL, GALVANIZED W/8 FEET POSTS
25+50 TO 28+83.5 RT

621.50 MANUFACTURED
TERMINAL SECTION, FLARED
28+83.5 TO 29+21 RT

621.80 REMOVAL AND DISPOSAL OF GUARDRAIL
25+50 TO 29+21 RT

900.620 SPECIAL PROVISION
(DELINEATOR WITH STEEL POST)
29+21 RT

STONE FILL, TYPE 1
31+68 - 31+81 LT
32+81 - 33+18 LT

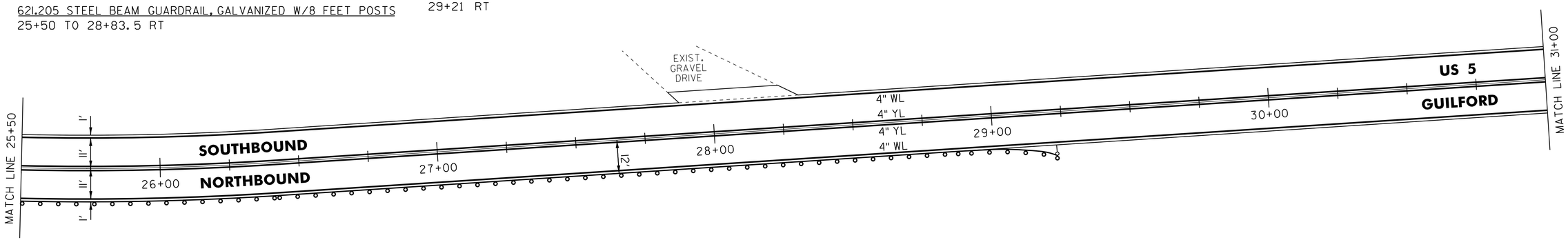

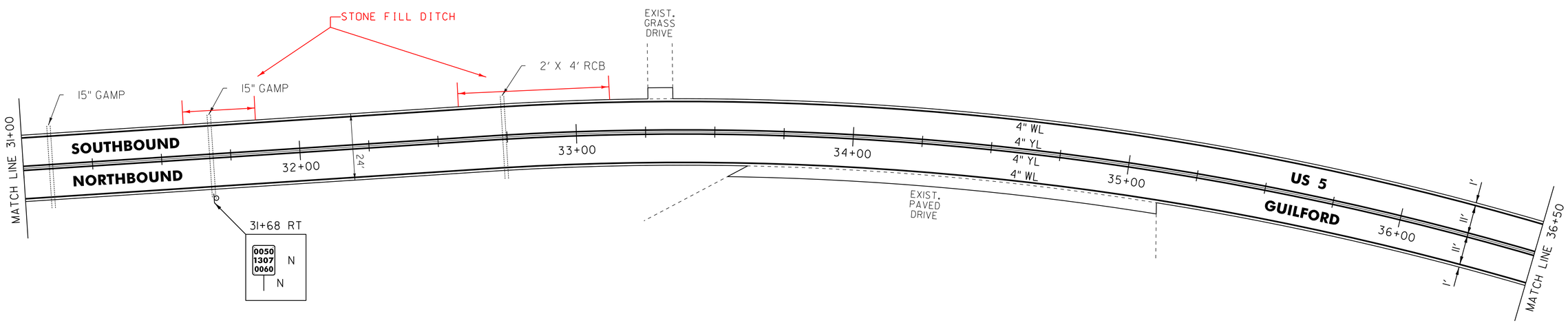

NOT TO SCALE

LEGEND

R	=	REMOVE EXISTING
S	=	SALVAGE
R&S	=	REMOVE AND SALVAGE
N	=	NEW
RET	=	RETAIN
B-B	=	BACK TO BACK
	=	EXISTING GUARDRAIL
	=	PROPOSED GUARDRAIL
YL	=	YELLOW LINE
WL	=	WHITE LINE
	=	DELINEATOR

ROADWAY LAYOUT 4

PROJECT NAME: GUILFORD-BRATTLEBORO
PROJECT NUMBER: STP 2707(1)

FILE NAME: /pave/07c166/pc166
PROJECT LEADER: PTS
DESIGNED BY: NLL
IPARM FILE NAME: 07C166_23

PLOT DATE: 29-JAN-2013 11:40
DRAWN BY: WWG
CHECKED BY: NLL/PTS
SHEET 23 OF 97