NOTE: BURIED STRUCTURE FOOTING REINFORCEMENT NOT SHOWN FOR CLARITY.

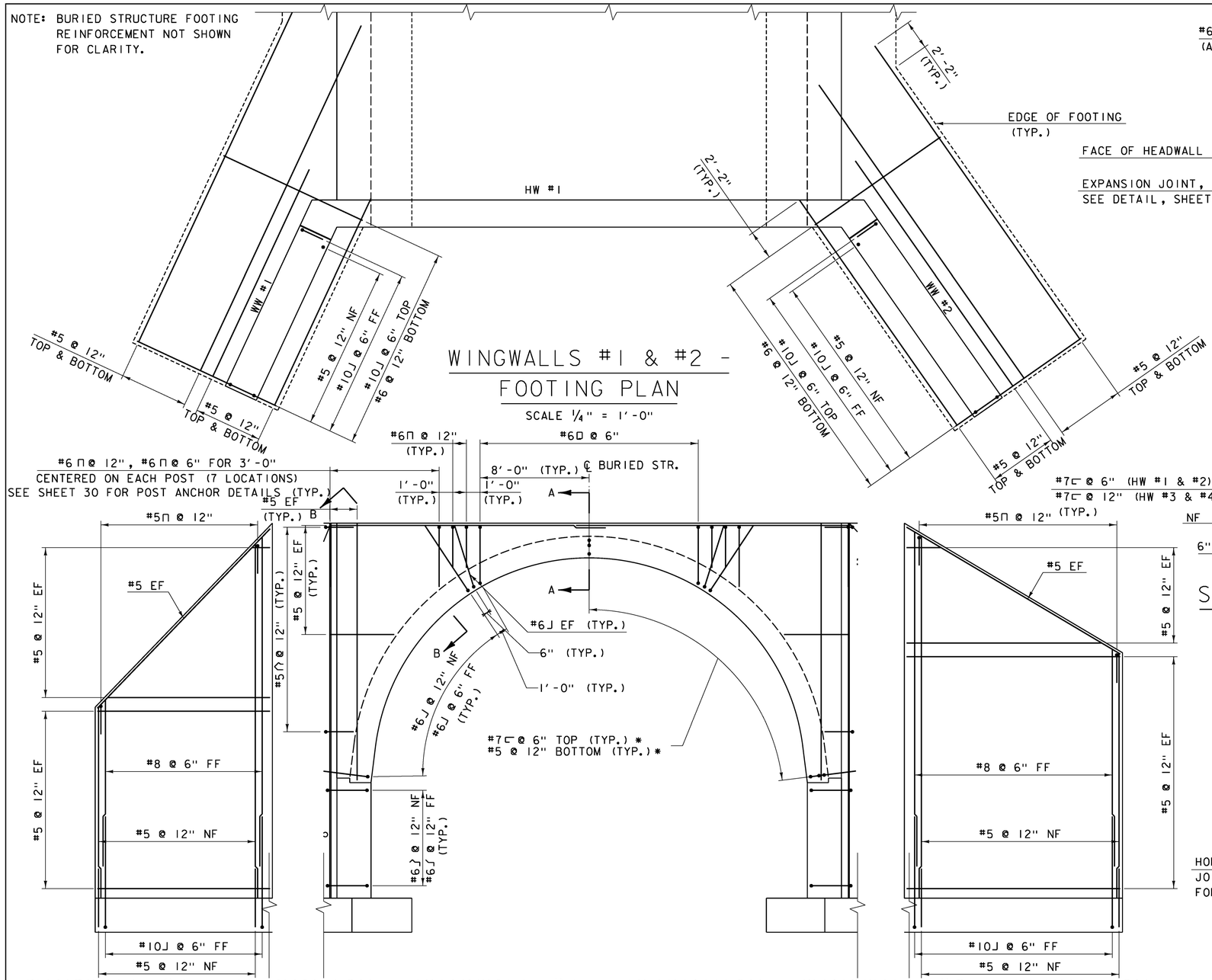

WINGWALLS #1 & #2 - FOOTING PLAN

SCALE 1/4" = 1'-0"

WINGWALL #1 - ELEVATION

SCALE 1/4" = 1'-0"

HEADWALL #1 - ELEVATION

SCALE 1/4" = 1'-0"

WINGWALL #2 - ELEVATION

SCALE 1/4" = 1'-0"

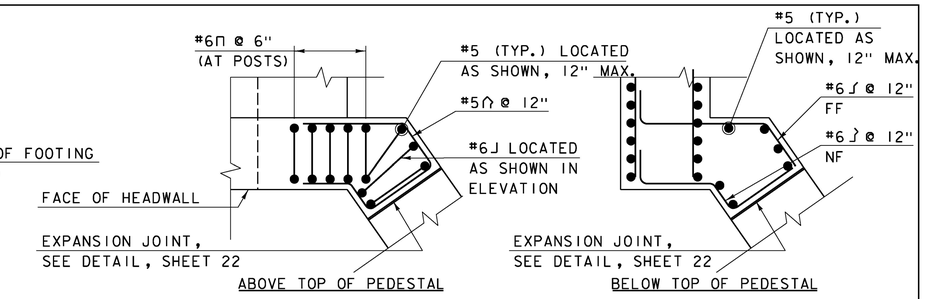

TYPICAL WINGWALL CORNER DETAIL

NOT TO SCALE

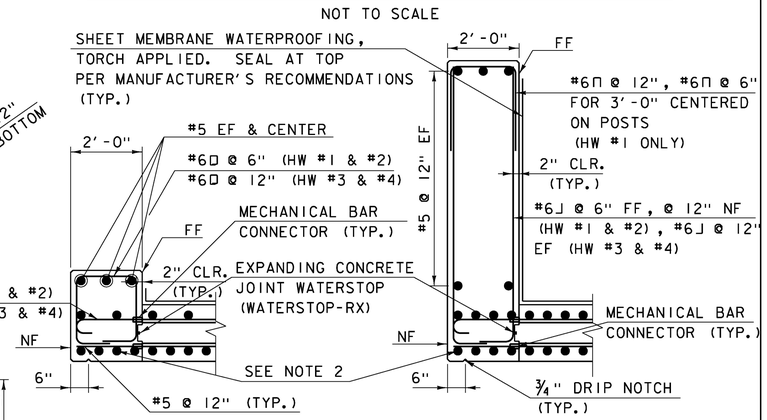

SECTION A-A

SCALE 1/2" = 1'-0"

SECTION B-B

SCALE 1/2" = 1'-0"

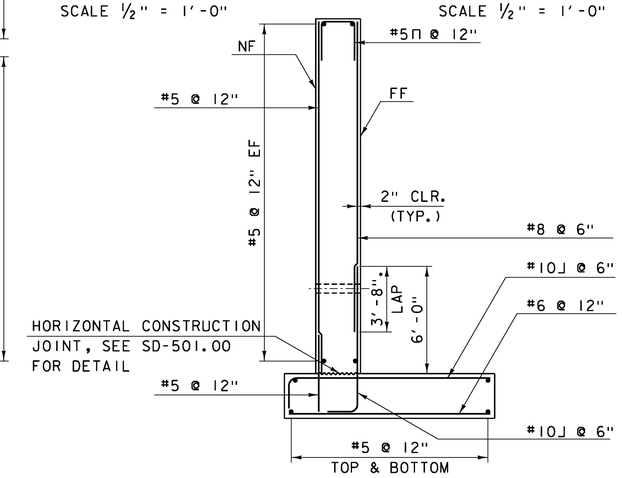

WINGWALL - SECTION

(WINGWALLS #1, #2, #7, AND #8)
SCALE 1/4" = 1'-0"

NOTE:

NF = NEAR FACE
FF = FAR FACE
EF = EACH FACE
▲ = CUT TO FIT IN FIELD
3" CLEAR, UNLESS OTHERWISE SPECIFIED ON THE PLANS.
2'-2" BAR LAP UNLESS OTHERWISE SPECIFIED ON THE PLANS.

NOTES:

1. HEADWALL REINFORCING STEEL MIRRORED ABOUT STRUCTURE CENTERLINE.
2. MAIN REINFORCING STEEL IN BOTTOM OF HEADWALL SECTION, ALTHOUGH NOT SHOWN IN ELEVATION FOR CLARITY, WILL BE THE SAME AS THAT USED IN THE ADJACENT BURIED STRUCTURE.
3. KEYED CONSTRUCTION JOINT OMITTED AT HEADWALL #1.

* #7 AND #5 MECHANICAL BAR CONNECTOR AT HEADWALL JOINT.

ECI ENGINEERS CONSTRUCTION — DuBois & King inc.

PROJECT NAME: RYEGATE
PROJECT NUMBER: STP CULV(10)

FILE NAME: z06cl56subl.dgn
PROJECT LEADER: E. DETRICK
DESIGNED BY: R. BARNES
US 5 INLET DETAILS

PLOT DATE: 3/23/16
DRAWN BY: R. BARNES
CHECKED BY: E. DETRICK
SHEET 23 OF 36