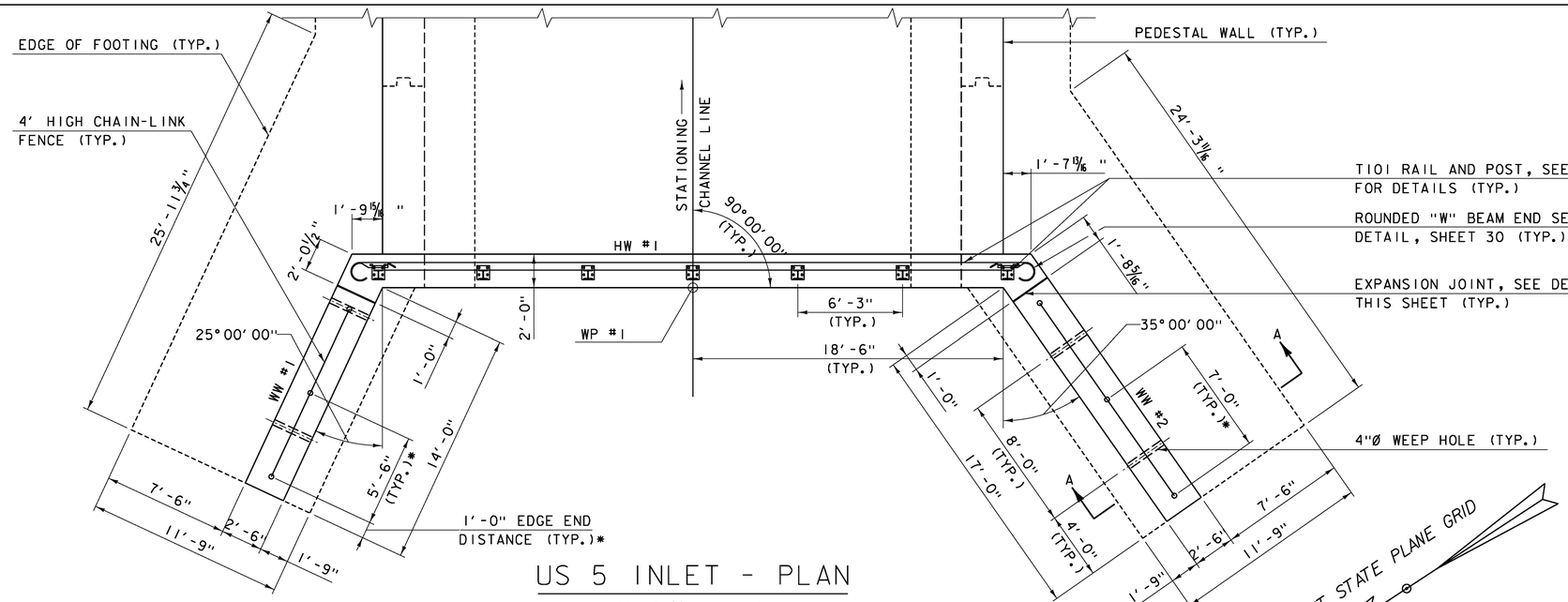

US 5 INLET - PLAN

SCALE 1/4" = 1'-0"

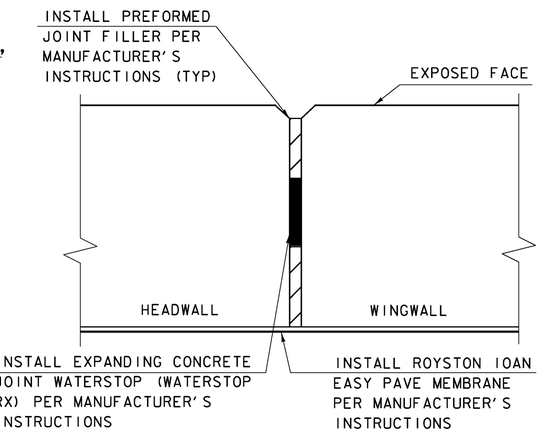

WINGWALL EXPANSION JOINT DETAIL

NOT TO SCALE

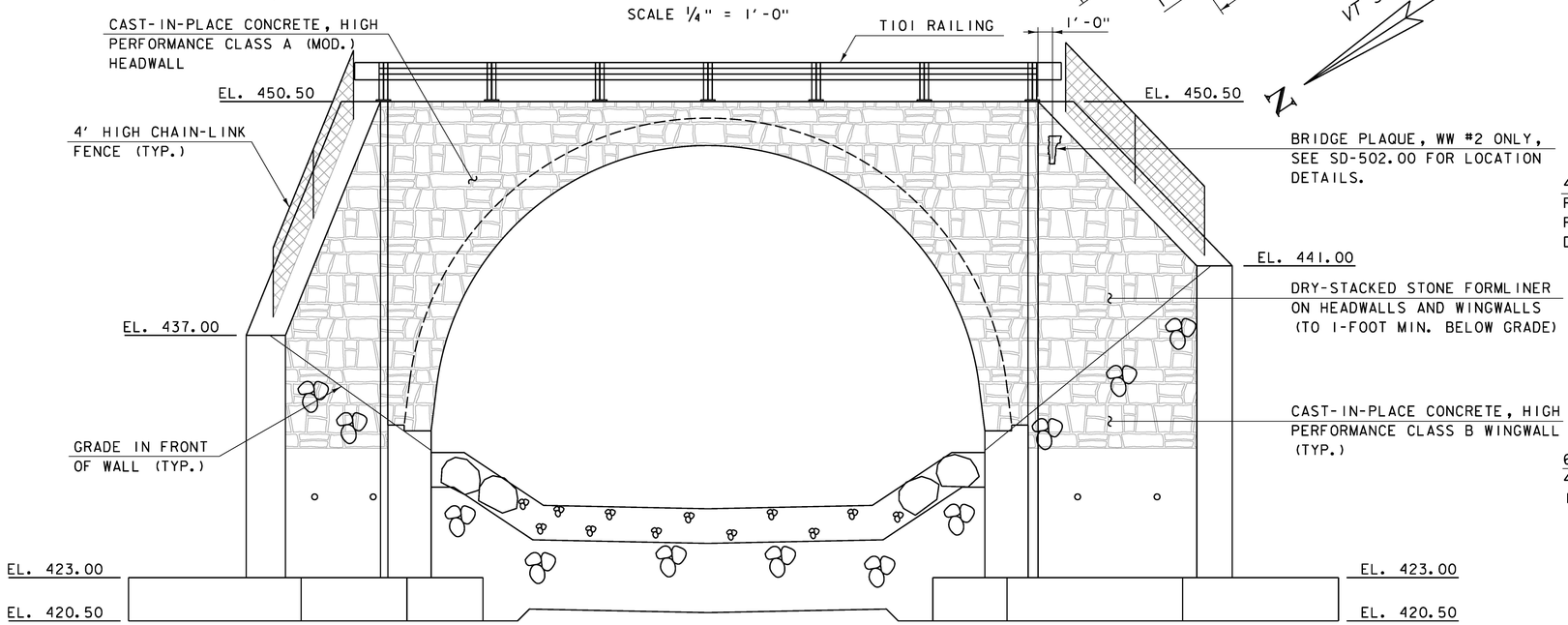

US 5 INLET - ELEVATION

SCALE 1/4" = 1'-0"

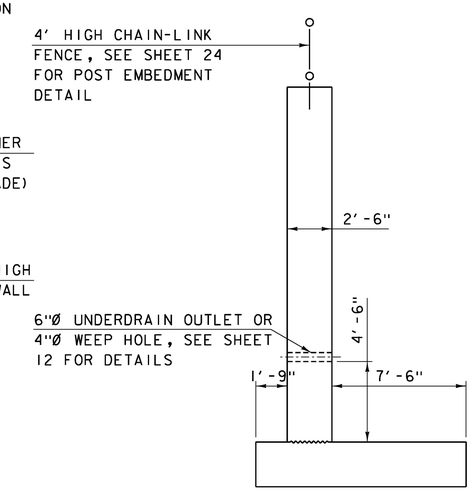

SECTION A-A

SCALE 1/4" = 1'-0"

* POST SPACING MEASURED ALONG HORIZONTAL.

PROJECT NAME: RYEGATE	
PROJECT NUMBER: STP CULV(10)	
FILE NAME: z06c156subl.dgn	PLOT DATE: 3/23/16
PROJECT LEADER: E. DETRICK	DRAWN BY: R. BARNES
DESIGNED BY: R. BARNES	CHECKED BY: E. DETRICK
US 5 INLET PLAN, ELEVATION, SECTION	SHEET 22 OF 36

ECI ENGINEERS CONSTRUCTION DuBois & King INC.