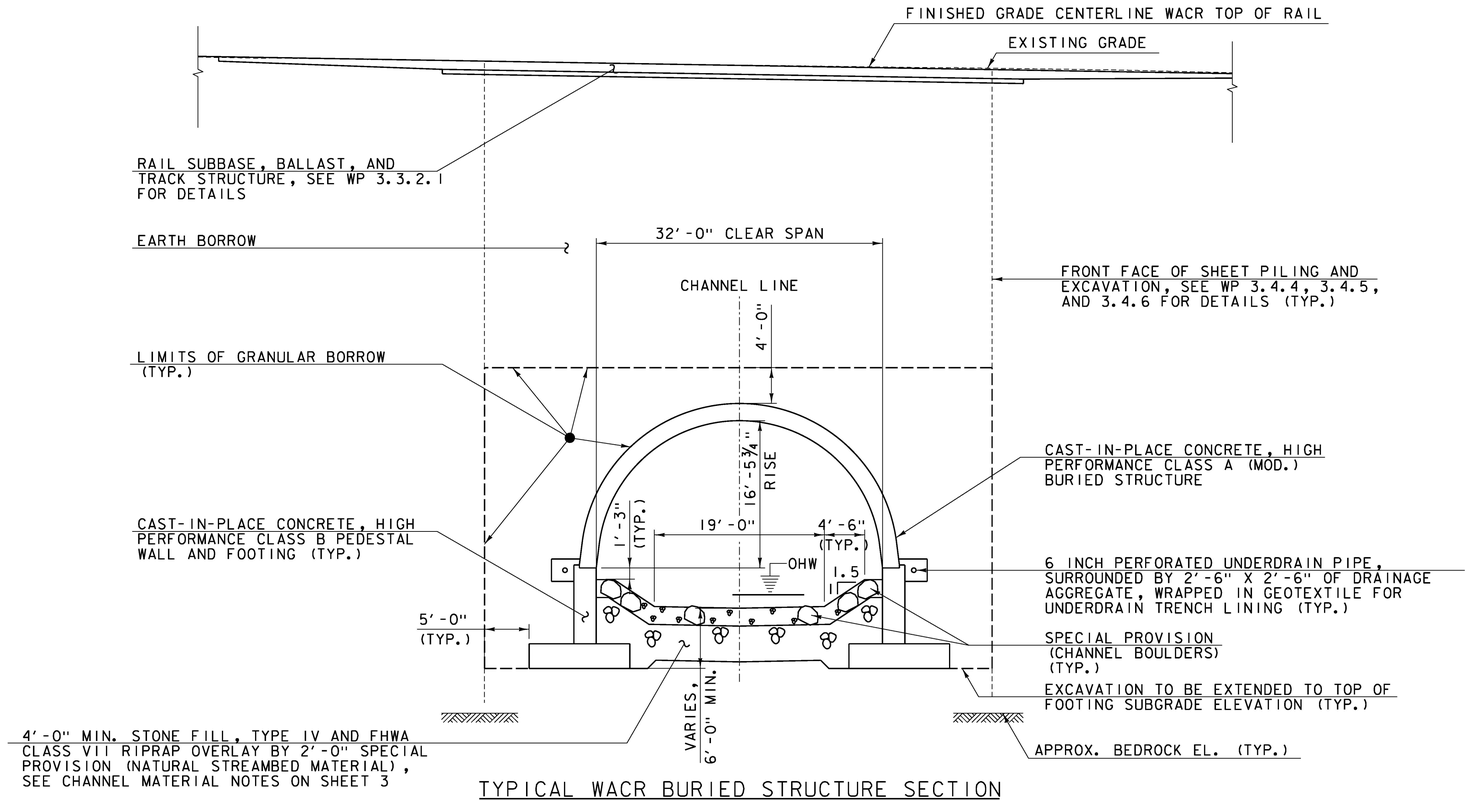

TYPICAL WACR BURIED STRUCTURE SECTION

SCALE 1/8" = 1'-0"

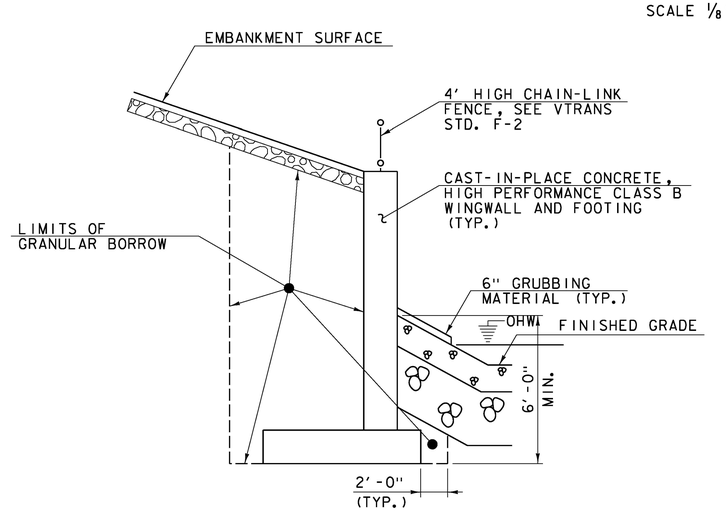

TYPICAL WINGWALL SECTION
(US 5 INLET / WACR OUTLET)

SCALE 3/16" = 1'-0"

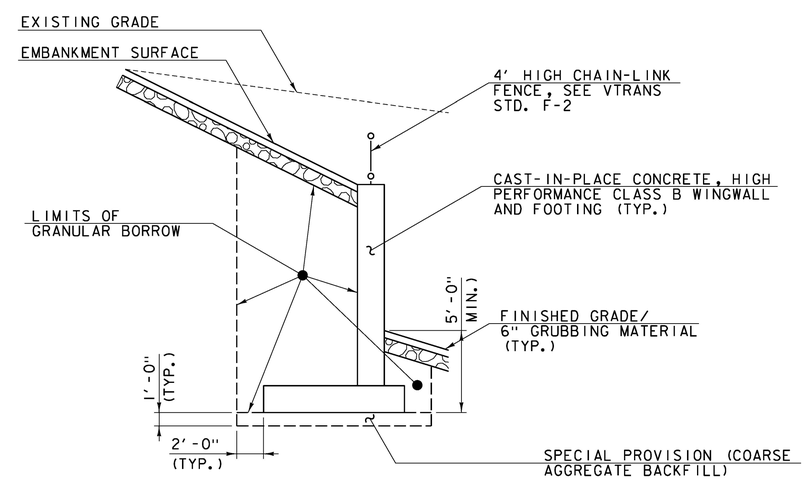

TYPICAL WINGWALL SECTION
(US 5 OUTLET / WACR INLET)

SCALE 3/16" = 1'-0"

PROJECT NAME: RYEGATE	
PROJECT NUMBER: STP CULV(10)	
FILE NAME: z06c156typ.dgn	PLOT DATE: 3/23/16
PROJECT LEADER: E. DETRICK	DRAWN BY: R. BARNES
DESIGNED BY: R. BARNES	CHECKED BY: E. DETRICK
TYPICAL STRUCTURE SECTIONS 2 OF 2	SHEET 4 OF 36

ECI ENGINEERS CONSTRUCTION DuBois & King inc.