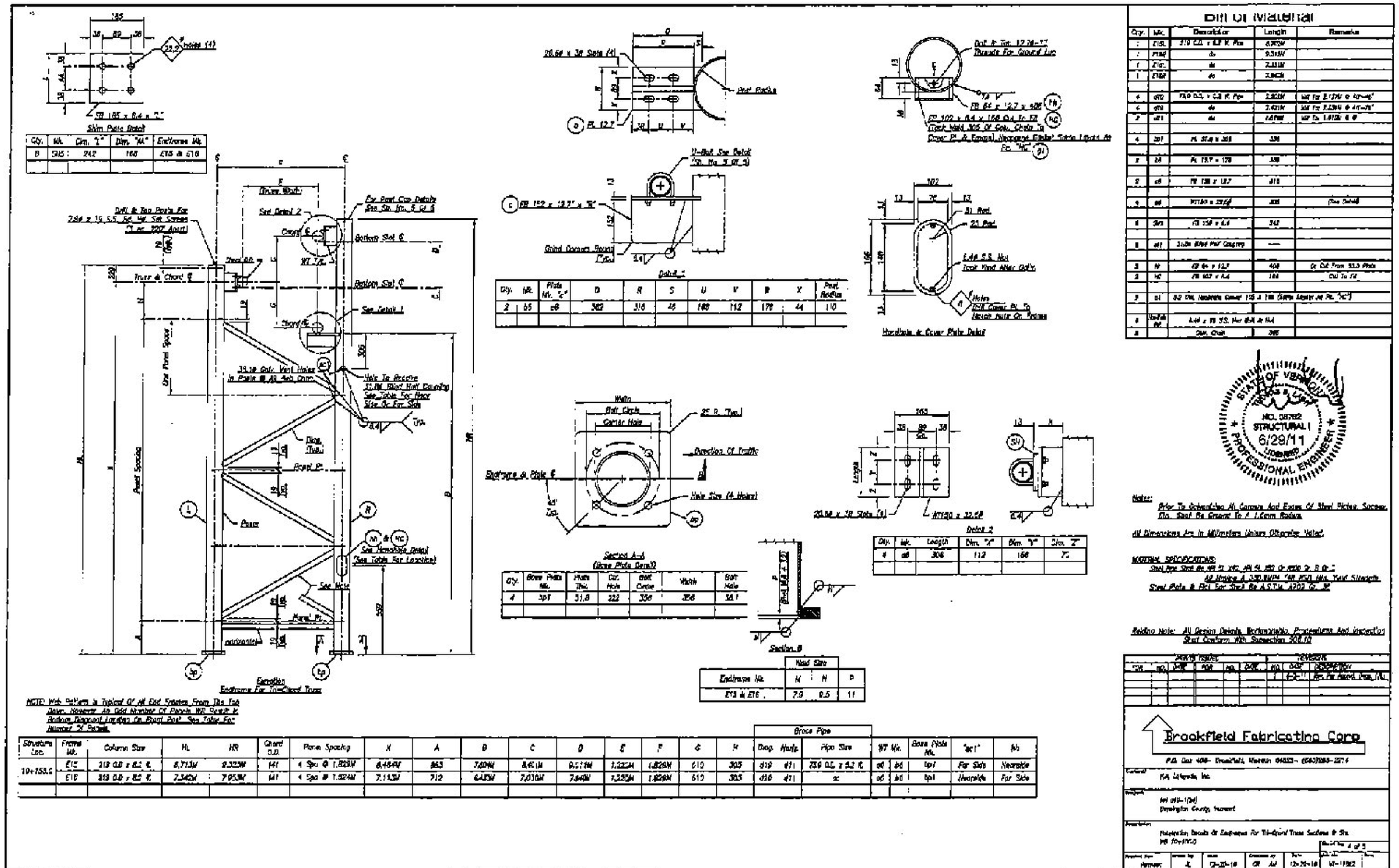

RECEIVED

FEB 7 2012

G.P.I.