Metric

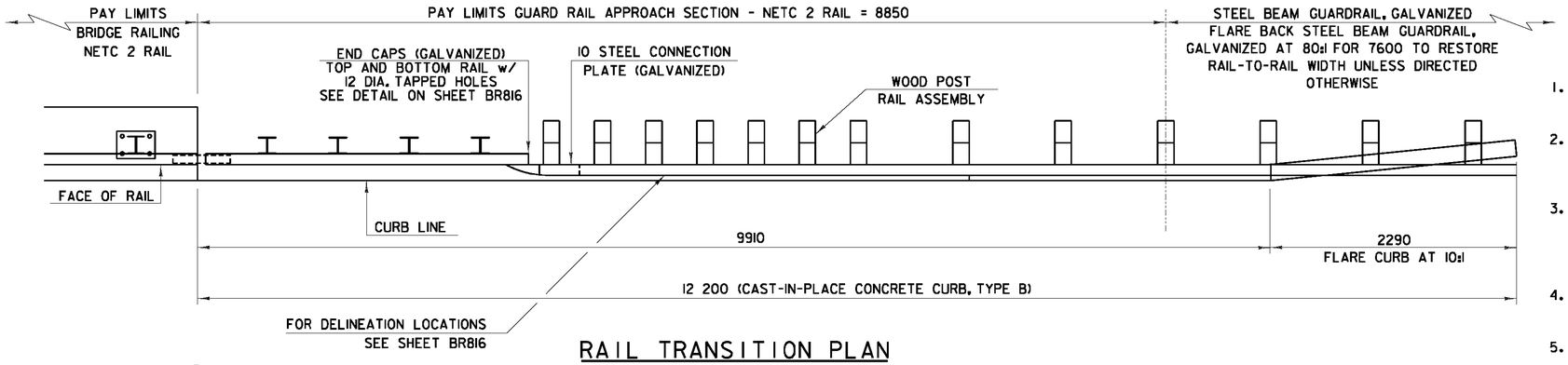

RAIL TRANSITION PLAN

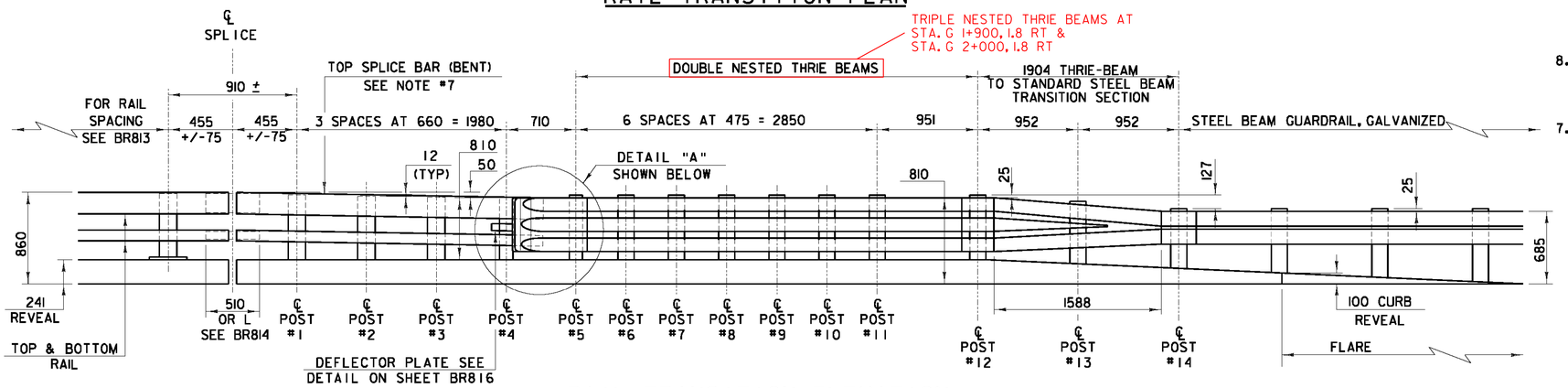

RAIL TRANSITION ELEVATION

NOTES

1. REFER TO SHEET BR713 FOR ADDITIONAL DETAILS, NOTES AND MATERIAL SPECIFICATIONS.
2. PAYMENT FOR GUARDRAIL APPROACH SECTION - GALVANIZED NETC 2 RAIL SHALL INCLUDE THE TERMINAL CONNECTOR, THE CONNECTION PLATE, THE DEFLECTOR PLATE, RAIL, POSTS, BLOCKS AND ATTACHMENT HARDWARE.
3. RETROREFLECTIVE MATERIAL SHALL MEET REQUIREMENTS OF SUBSECTION 750.08 AND SHALL BE A 1.6mm ALUMINUM BACKING WHITE OR YELLOW REFLECTOR. YELLOW IS TO BE INSTALLED ON THE DRIVER'S LEFT AND WHITE ON THE DRIVER'S RIGHT.
4. ALL APPROACH RAIL SPLICES SHALL BE LAPPED IN THE DIRECTION OF TRAFFIC FLOW.
5. TUBE AND STEEL POST MATERIALS, DIMENSION SIZES AND NOTES SHALL BE THE SAME AS THOSE OF THE BRIDGE RAIL, UNLESS OTHERWISE NOTED.
8. APPROACH RAIL BOLTS SHALL BE ASTM F 568M CLASS 4.6 AND NUTS SHALL BE AASHTO M291M (GALVANIZED). WASHERS SHALL BE ASTM F844.
7. WELD TOP SPLICE BAR TO FIT BEND. USE COMPLETE PENETRATION WELD (B-U2).

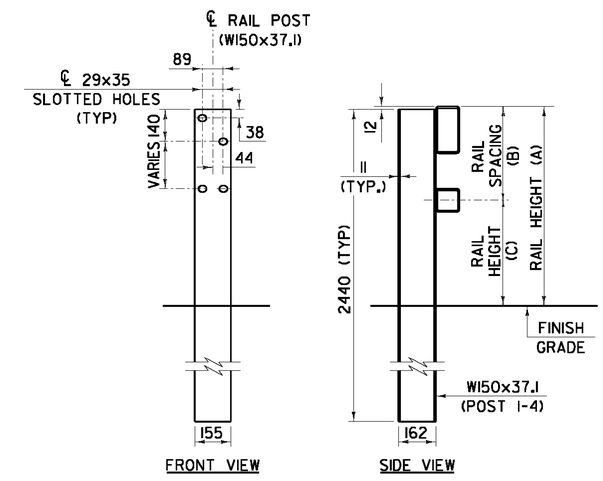

RAIL POST SECTION (POSTS 1-4)

POST NUMBER	RAIL HEIGHT (A)	RAIL SPACING (B)	RAIL HEIGHT (C)
1	850	400	450
2	840	395	445
3	825	385	440
4	810	375	435

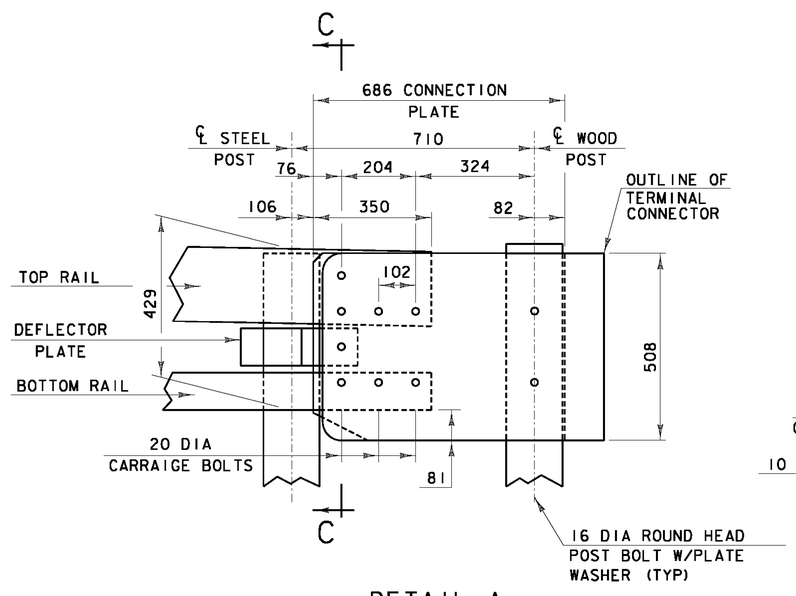

DETAIL A

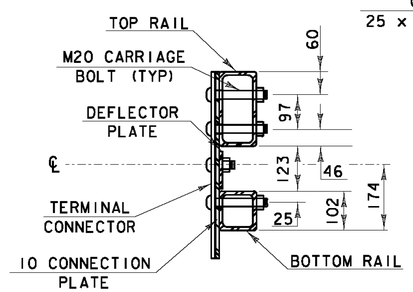

SECTION C-C (CONNECTION PLATE)

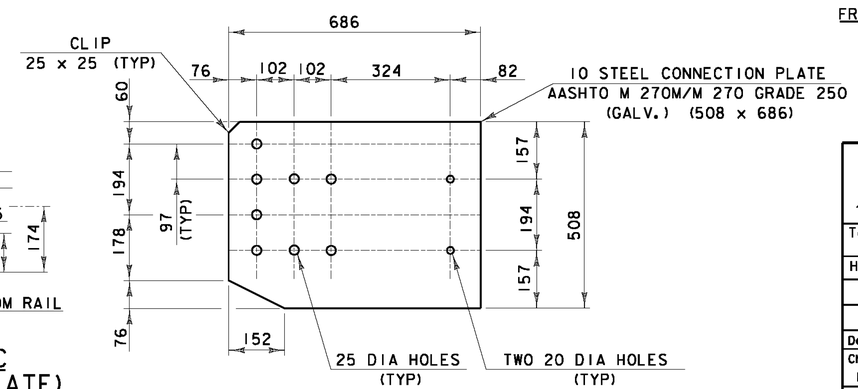

CONNECTION PLATE

STATE OF VERMONT
AGENCY OF TRANSPORTATION

Town Of BENNINGTON	Bridge No. 14A
Highway No.	Log Sta. / Surv. Sta.
RAMP G/S OVER VT ROUTE 279 WB	
APPROACH RAILING	
Designed By VTrans	Drawn By VTrans
Checked By M. CHENETTE Date 11/09	Bridge Design Supervisor G. BOGUE Date 11/09
PROJECT BENNINGTON	PROJECT NO. NH F019-1(54)
Stantec I.G.C. Info:	
Bridge Sheet No. BR815	Sheet 290 of 468

3/16/2010 2:06:37 PM v:\1953\active\195310002\structural\design\sl7.plot Files\815-SIRAMPGS-NETC Approach.pdf