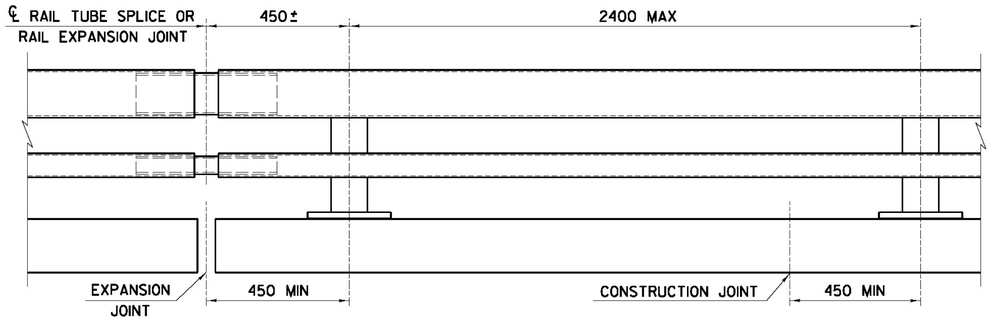

BRIDGE RAILING ELEVATION

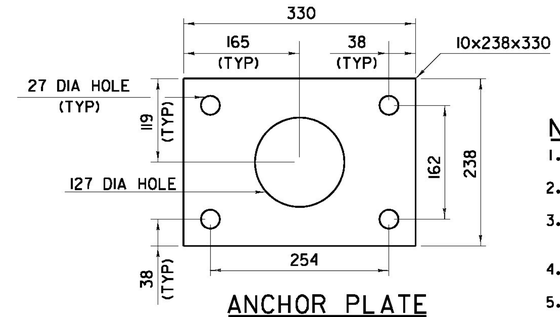

ANCHOR PLATE

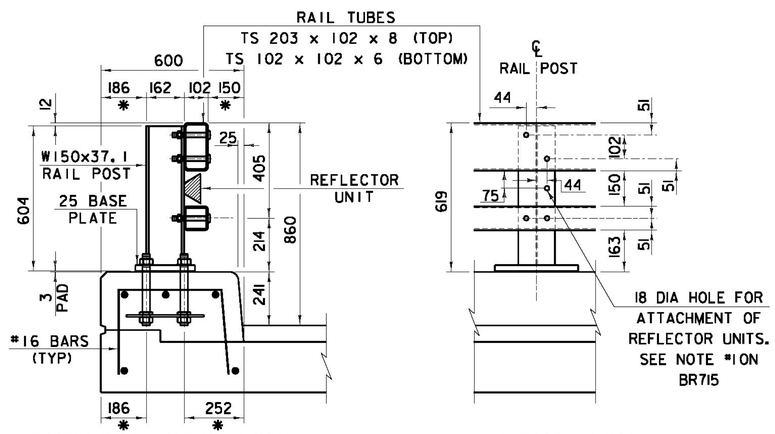

TYPICAL SECTION

*DIMENSION SHOWN IS FOR RAIL ON BRIDGE DECK. DIMENSION ON WINGWALL VARIES. WINGWALL IS TANGENT, FACE OF RAIL IS RADIAL.

ELEVATION

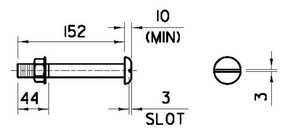

M20 DIA M164M (TYPE I) ROUND HEAD BOLT

(WITH WASHER AND PREVAILING TORQUE TYPE LOCK NUT)
(SEE NOTE #8)
ONLY FULL DIAMETER BODY BOLTS WILL BE ALLOWED.

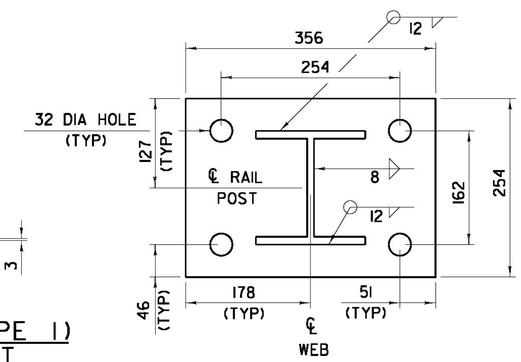

POST BASE PLATE

NOTES

1. ALL WORK AND MATERIALS SHALL CONFORM TO SECTION 525.
2. RAILING MATERIAL SHALL MEET THE REQUIREMENTS OF SECTION 732.
3. ALL EXPOSED CUT OR SHEARED EDGES SHALL BE ROUNDED TO A 2mm RADIUS AND BE FREE OF BURRS.
4. RAIL POSTS SHALL BE SET NORMAL TO GRADE.
5. SECTIONS OF RAIL TUBE SHALL BE ATTACHED TO A MINIMUM OF TWO BRIDGE RAIL POSTS AND PREFERABLY TO AT LEAST FOUR POSTS.
6. RAIL TUBE EXPANSION JOINTS SHALL BE PROVIDED IN ANY RAIL BAY SPANNING THE END OF AN INTEGRAL ABUTMENT BRIDGE AND AT ALL SUPERSTRUCTURE EXPANSION JOINTS. EXPANSION JOINT WIDTH SHALL BE "X" AT 7°C AND WILL BE ADJUSTED IN THE FIELD BY THE ENGINEER FOR OTHER TEMPERATURES.
7. RAIL POSTS ANCHORING NUTS SHALL BE TIGHTENED TO A SNUG FIT AND GIVEN AN ADDITIONAL ONE-EIGHTH TURN.
8. RAIL TUBES SHALL BE ATTACHED USING M20 FULL DIAMETER BODY AASHTO M 164M (TYPE I) ROUND HEAD BOLTS INSERTED THROUGH THE FACE OF THE TUBE. HOLES IN POSTS SHALL BE 2mm LARGER THAN THE BOLT SIZE.
9. HOLES IN RAILS FOR RAIL TUBE ATTACHMENT MAY BE FIELD-DRILLED. HOLES SHALL BE COATED WITH AN APPROVED ZINC-RICH PAINT PRIOR TO INSTALLATION.
10. ANY BENDING OF RAIL SHALL BE DONE AT A FABRICATION PLANT, ACCORDING TO A PROCEDURE PROVIDED BY THE FABRICATOR.
11. THE FABRICATOR SHALL SUBMIT FABRICATION DRAWINGS INCLUDING WELDING PROCEDURES IN ACCORDANCE WITH SECTION 105.

MATERIALS

3mm PAD SHALL COMPLY WITH STANDARD SPECIFICATION SUBSECTION 731.01 OR 731.02.

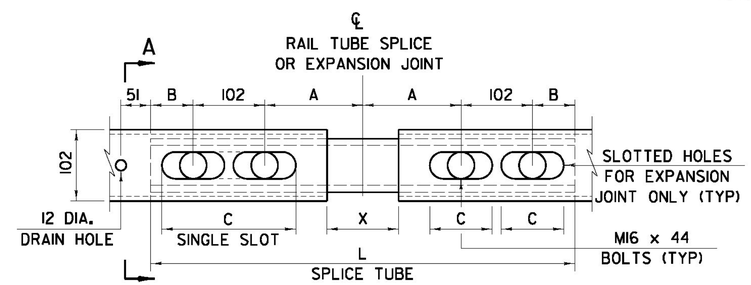

RAIL TUBE SPLICE AND RAIL EXPANSION JOINT DETAIL

(BOTTOM VIEW)

SPLICE TABLE					
T	A	B	C	L	X
NA	100	50	--	510	20
EXPANSION JOINT TABLE					
<100	100	50	65	510	65
>100 <165	140	60	90	605	100
>165 <230	165	85	230*	705	130
>230 <330	215	110	280*	860	180

T = TOTAL MOVEMENT AT RAIL EXPANSION JOINT AS SHOWN IN THE CONTRACT PLANS. (SEE NOTE #6)
* = SINGLE SLOT

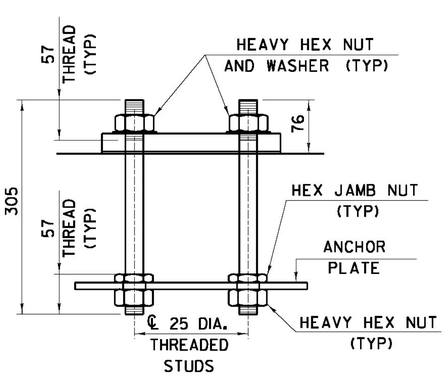

RAIL POST ANCHORAGE

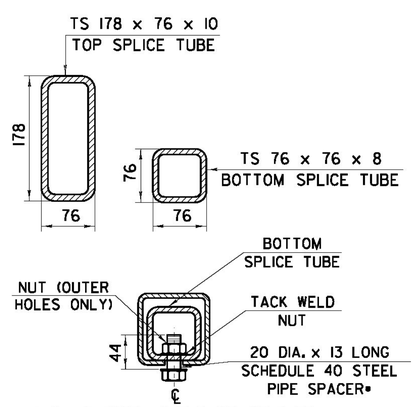

16 DIA TAPPED HOLE IN SPLICE TUBE
29 x 'C' SLOT• OR 19 DIA. HOLE••
IN RAIL TUBE FOR 16 DIA.
BOLT AND PLAIN HARDENED WASHER

A-A RAIL TUBE SPLICE AND RAIL EXPANSION JOINT SECTION

FOR DETAILS NOT SHOWN,
SEE "RAIL TUBE SPLICE SECTION"
•EXPANSION JOINT
••SPLICE

STATE OF VERMONT
AGENCY OF TRANSPORTATION

Town Of BENNINGTON	Bridge No. 13N
Highway No.	Log Sta. / Sury. Sta.
US ROUTE 7 NB OVER VT ROUTE 279 EB	
BRIDGE RAILING – NETC 2 RAIL	
Designed By VTrans	Drawn By VTrans
Checked By M. CHENETTE Date 11/09	Bridge Design Supervisor G. BOGUE Date 11/09
PROJECT BENNINGTON	PROJECT NO. NH F019-1(54)
L.G.C. Info:	
Bridge Sheet No. BR713	Sheet 270 of 468

Stantec

3/16/2010 2:06:26 PM vx\1953\active\195310002\structural\design\sl7\plot files\713-SL7NB-NETC Rdlp.tif