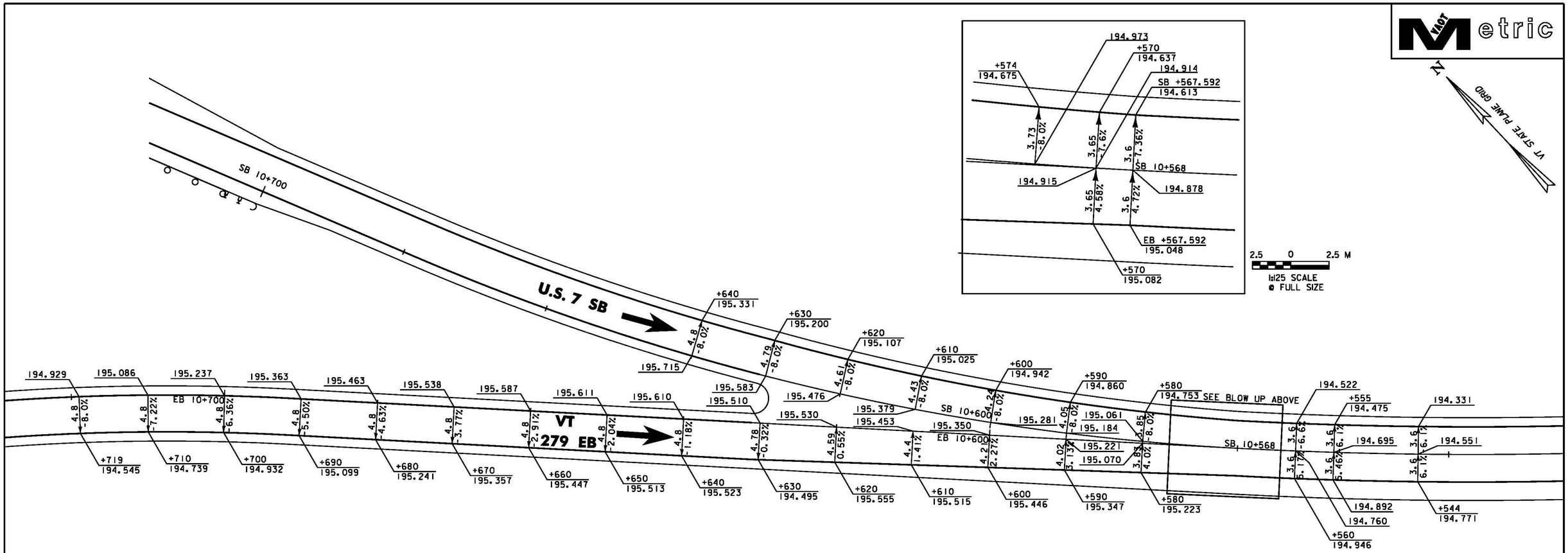

STA. EB/SB 10+567.592

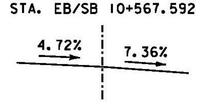

STA. EB 10+620 STA. SB 10+620

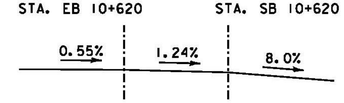

STA. EB 10+555

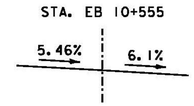

STA. EB 10+590 / SB 10+590

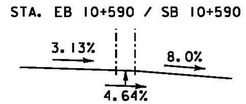

VT ROUTE 279 EASTBOUND / U.S. ROUTE 7 SOUTHBOUND MERGE
CRITICAL CROSS SECTIONS

N. T. S.

FOR ADDITIONAL INFORMATION
SEE CROSS SECTION SHEETS:
EBX-11, EBX-12, SBX-12

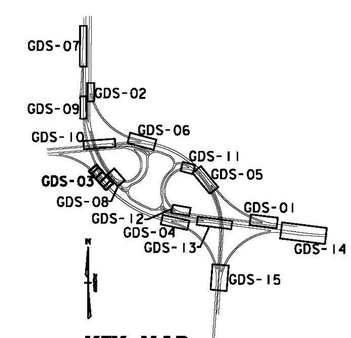

KEY MAP

5 0 5 M
1:250 SCALE
@ FULL SIZE

Stantec

PROJECT NAME: BENNINGTON
PROJECT NUMBER: NH 019-1(54)

FILE NAME: ...\plot_files\zd307c4det_gore.ptf PLOT DATE: 1/26/2010
DESIGN SUPERVISOR: GREG EDWARDS DRAWN BY: STANTEC
DESIGNED BY: MARC FOISY CHECKED BY: GARY SANTY
GORE DETAIL SHEET - GDS-03 SHEET 32 OF 468

1/26/2010 4:46:18 PM v:\1953\active\195310002\transportation\drawing\contract_4\plot_files\zd307c4det_gore.ptf