ASSEMBLY 01

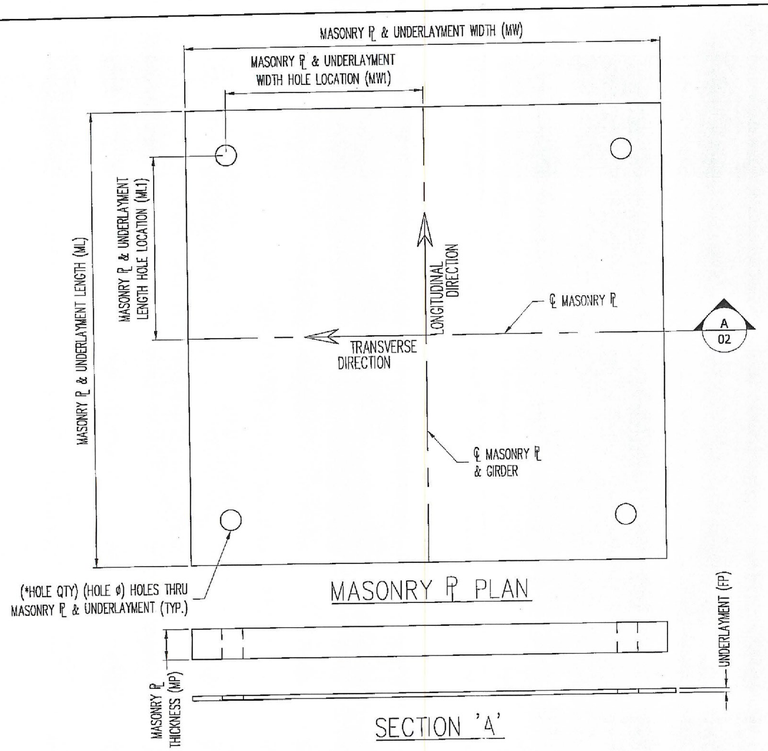

MASONRY PLATE SCHEDULE (PF)													
ASSEM MK	PIECE MK	QTY	MP	MW	ML	MW1	ML1	*HOLE QTY	HOLE ø	UL MK	UL FP	UL MATERIAL	MASONRY PL MATERIAL
1A	1mp1	8	50.8	750.0	500.0	295.0	135.0	4	54.0	1FA (1fp1)	3.2	VT 731.01	A709 GR 250

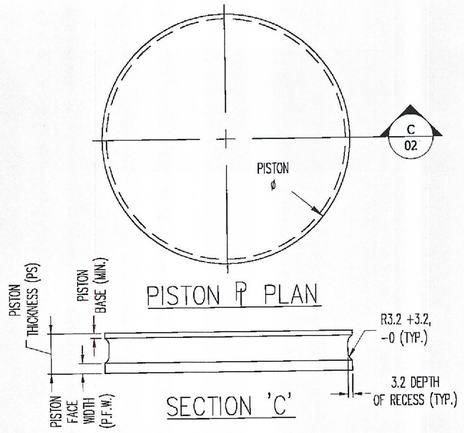

PISTON SCHEDULE (PF)							
ASSEM MK	PIECE MK	QTY	PS	PISTON ø	PFW	PISTON BASE	PISTON MATERIAL
1A	1ps1	8	29.7	208.5	4.2	7.9	A709 GR 250

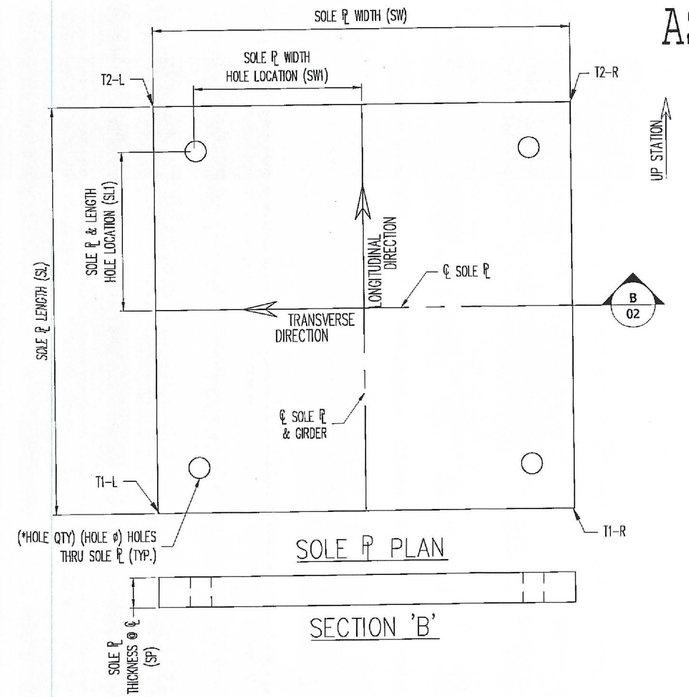

SOLE PLATE SCHEDULE (PF)														
ASSEM MK	PIECE MK	QTY	BEVEL T1-L	BEVEL T1-R	BEVEL T2-L	BEVEL T2-R	SP	SW	SL	SW1	SL1	*HOLE QTY	HOLE ø	SOLE PLATE MATERIAL
1A	1sp1	8	25.0	25.0	53.0	53.0	39.0	750.0	500.0	295.0	135.0	4	54.0	A709 GR 250

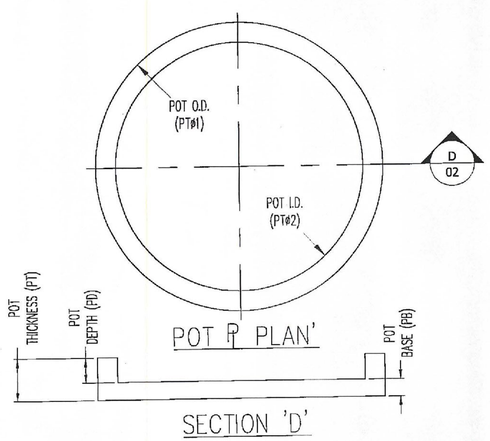

POT PLATE SCHEDULE (PF)								
ASSEM MK	PIECE MK	QTY	PT	PT ø1	PT ø2	PB	PD	POT PL MATERIAL
1A	1pt1	8	43.7	247.7	209.6	18.3	25.4	A709 GR 250

TVGA CONSULTANTS

☒ NO EXCEPTIONS TAKEN ☐ REJECTED
☐ FURNISH AS CORRECTED
☐ REVISE AND RESUBMIT

ENGINEER has reviewed Shop Drawings and Samples and other data which Contractor is required to submit, only for conformance with the information given in the Contract Documents and compatibility with the design concept of the completed Project as a functioning whole as indicated in the Contract Documents. Such reviews do not extend to means, methods, techniques, sequences or procedures of construction or to safety precautions and programs incident thereto. Such reviews do not extend to any LEED certification or accreditation. Contractor is responsible for dimensions to be confirmed and correlated at the job site; for information that pertains solely to the fabrication processes or to techniques of construction; and for coordination of the work of all trades.

BY: JJM
DATE: 11-18-09

* PER PLATE
ALL DIMENSIONS IN MILLIMETERS UNLESS OTHERWISE NOTED
SEE SHT. 01 FOR ASSEMBLY INFORMATION & DETAILS.
SEE SHT. GN1 FOR GENERAL NOTES & COATING LIMITS.

REV.	DESCRIPTION	DATE	DET.	CKD.

STATE OF OHIO — PHILIP M. GABE — 84458 — REGISTERED PROFESSIONAL ENGINEER
21 OCT 2009

D.S. BROWN
THE D.S. BROWN COMPANY
300 E. CHERRY STREET
NORTH BALTIMORE, OHIO 45872
419.257.3561
FAX: 419.257.0332
WWW.DSBROWN.COM

	ITEM	QUANTITY
LOCATION — VT-279 & RAMPS OVER WALLOOMSAC RIVER	–	–
BRIDGE — B15N & B15S	–	–
PROJECT — AC NH 019-1(51)	–	–
—	–	–
P.O. NO. — 200901908	–	–
DESIGNER — TVGA CONSULTANTS	–	–
CUSTOMER — KUBRICKY CONSTRUCTION CORP.	–	–
	–	–
	–	–
	–	–

DESCRIPTION: FIXED HLMR SUB ASSEMBLY DETAILS
BENNINGTON CO., VT

SCALE:	DRAWN BY:	CHECKED BY:	DATE:	
N.T.S.	DA	MJG	7/29/09	–

PROJECT NUMBER	PRODUCT CODE	RELEASE	SHEET
27084	1112	1	02